GENERAL PROJECT INFORMATION

SITE NAME

THE AREA SCHEDULED FOR CONSTRUCTION IS KNOWN AS **"MIRA MUNCIE HOTEL"** (HEREINAFTER REFERRED TO AS THE "PROJECT").

PROJECT LOCATION

THE PROJECT IS LOCATED IN THE **TOWNSHIP, MUNCIE, DELAWARE COUNTY, INDIANA.**

ADDRESS: **4200 W BETHEL AVE, MUNCIE, IN 47304**
LATITUDE: **40° 13' 15.71" N**
LONGITUDE: **85° 26' 09.39" W**

OWNER'S INFORMATION

NAME: **MIRA DEVELOPMENT COMPANY**
ADDRESS: **900 E MAIN STREET, LOUISVILLE, KY 40206**
REPRESENTATIVE: **ALEX BEATTY**
TELEPHONE: **(317) 910-2771**

DEVELOPER'S INFORMATION

NAME: **SAME AS OWNER**
ADDRESS:
REPRESENTATIVE:
TELEPHONE:

ASSESSMENT OF CONSTRUCTION PLAN ELEMENTS - SECTION A

A1 INDEX SHOWING LOCATIONS OF REQUIRED PLAN ELEMENTS

REFER TO THE FOLLOWING LIST FOR LOCATIONS OF REQUIRED PLAN ELEMENTS

- C0.0 TITLE SHEET — A2, A5
- C2.X SERIES EXISTING CONDITIONS AND DEMOLITION(S) — A13, A15, A16
- C3.X SERIES SITE PLAN(S) — A6, A28
- C4.X SERIES EROSION CONTROL PLAN(S) — A12, A25, A28, A29
- C5.X SERIES GRADING PLAN(S) — A24, A28
- C6.X SERIES UTILITY PLAN(S) — A26, A27, A28

A2 VICINITY MAP

REFER TO THE TITLE SHEET.

A3 PROJECT DESCRIPTION

CONSTRUCTION OF A ± **18,190** SF **HOME2SUITES HOTEL** ON ±**3.53** ACRES.
THE PROJECT IS LOCATED IN SECTION **31** OF **T21N, R10E, IN THE MUNCIE, DELAWARE** COUNTY, IN.

A4 LATITUDE AND LONGITUDE

REFER TO **C0.0 TITLE SHEET OR REFER TO THE PROJECT LOCATION ABOVE.**

A5 LEGAL DESCRIPTION OF THE PROJECT SITE

REFER TO C0.0 TITLE SHEET.

A6 11"x17" PLAT

REFER TO C3.X SERIES SITE PLAN(S).

A7 100-YEAR FLOODPLAINS, FLOODWAYS, AND FLOODWAY FRINGES

THE PROJECT SITE **IS NOT** LOCATED WITHIN ZONE "X" WHICH IS DEFINED AS AREAS DETERMINED TO BE OUTSIDE OF THE 0.2% ANNUAL CHANCE FLOODPLAIN AND ZONE "AE" WHICH IS DEFINED AS AREAS DETERMINED TO BE WITHIN FLOOD HAZARD WITH DETERMINED BASE FLOOD ELEVATIONS. FIRM MAP PANEL **18035C0231D**, DATED **JULY 4, 2011.**

A8 ADJACENT LANDUSE, INCLUDING UPSTREAM WATERSHED

NORTH: **MULTI-FAMILY RESIDENTIAL**
SOUTH: **COMMERCIAL**
EAST: **HOTEL**
WEST: **MULTI-FAMILY RESIDENTIAL**

A9 IDENTIFICATION OF U.S. EPA APPROVED OR ESTABLISHED TMDL

THE PROJECT **DOES** FALL WITHIN THE JAKES CREEK WATERSHED WITH A U.S. EPA APPROVED OR ESTABLISHED TMDL.

A10 IDENTIFICATION OF RECEIVING WATERS

THE PROJECT SITE DISCHARGES **NORTH TO JAKES CREEK.**

A11 IDENTIFICATION OF DISCHARGES TO A WATER ON THE CURRENT 303(D) LIST OF IMPAIRED WATERS

THE PROJECT SITE DIRECTLY DISCHARGES INTO **JAKES CREEK** WHICH IS CATEGORIZED AS **IMPAIRED FOR FULL BODY CONTACT.**

A12 SOILS MAP INCLUDING SOIL DESCRIPTIONS AND LIMITATIONS

THE UNITED STATES DEPARTMENT OF AGRICULTURE (USDA) NATURAL RESOURCES CONSERVATION SERVICE (NRCS) WEB SOIL SURVEY OF **DELAWARE** COUNTY, INDIANA, INDICATES THAT **(BLOUNT-DEL REY SILT LOAMS, 0 TO 1 PERCENT SLOPES (BmlA); PEWAMO SILTY CLAY LOAM, 0 TO 1 PERCENT SLOPES (PkkA))** SOILS ARE THE PREDOMINANT SOILS WITHIN THE PROJECT SITE. CONTRACTOR TO FOLLOW GEOTECHNICAL ENGINEER'S RECOMMENDATIONS FOR SOIL REMEDIATION AS REQUIRED. REFER TO SHEET C0.0 - TITLE SHEET FOR SOILS MAP.

A13 LOCATION AND NAME OF ALL WETLANDS, LAKES AND WATER COURSES ON AND ADJACENT TO THE PROJECT SITE

EXISTING WETLANDS **DO NOT** EXIST WITHIN THE PROJECT SITE.

A14 STATE / FEDERAL WATER QUALITY PERMITS

ADDITIONAL STATE / FEDERAL PERMITS **ARE** REQUIRED FOR THIS PROJECT.

A15 IDENTIFICATION OF EXISTING VEGETATIVE COVER

THE PROJECT SITE IS **PREDOMINATELY UNDEVELOPED ROW CROP AGRICULTURE FIELD.**

A16 EXISTING SITE TOPOGRAPHY AT AN INTERVAL APPROPRIATE TO INDICATE DRAINAGE PATTERNS

THE EXISTING TOPOGRAPHY WITHIN THE PROJECT SITE IS SHOWN ON THE C2.X EXISTING CONDITIONS AND DEMOLITION PLAN(S).

A17 LOCATIONS WHERE RUNOFF ENTERS THE PROJECT SITE

THERE IS NO OFF-SITE RUNOFF ENTERING THE PROJECT SITE.

A18 SPECIFIC POINTS WHERE EXISTING STORMWATER DISCHARGE WILL LEAVE THE PROJECT SITE

IN THE EXISTING CONDITION, THE SITE DRAINS **NORTH EAST TO AN EXISTING STORM STRUCTURE NEAR N. MARLEON DR.**

A19 LOCATION OF ALL EXISTING STRUCTURES ON THE PROJECT SITE

REFER TO THE C2.X EXISTING CONDITIONS AND DEMOLITION PLAN(S) FOR LOCATIONS OF EXISTING STRUCTURES.

A20 EXISTING PERMANENT RETENTION OR DETENTION FACILITIES

THERE **ARE NO** EXISTING DETENTION OR RETENTION FACILITIES ARE LOCATED WITHIN THE PROJECT SITE.

A21 IDENTIFICATION OF POTENTIAL DISCHARGES TO GROUND WATER

RUNOFF **WILL NOT** BE DISCHARGED TO GROUND WATER.

A22 PROJECT AREA

3.53± ACRES

A23 EXPECTED LAND DISTURBANCE AREA

3.53± ACRES

A24 PROPOSED FINAL TOPOGRAPHY AT AN INTERVAL APPROPRIATE TO INDICATE DRAINAGE PATTERNS

THE PROPOSED TOPOGRAPHY WITHIN THE PROJECT SITE IS SHOWN ON C5.X SERIES GRADING AND DRAINAGE PLAN(S).

A25 LOCATIONS AND APPROXIMATE BOUNDARIES OF ALL DISTURBED AREAS

REFER TO C4.X SERIES EROSION CONTROL PLAN(S) FOR APPROXIMATE LIMITS OF DISTURBANCE.

A26 LOCATIONS, SIZE AND DIMENSIONS OF PROPOSED STORMWATER SYSTEMS

REFER TO C6.X SERIES UTILITY PLAN(S) AND PROFILE SHEET(S) FOR INFORMATION ON THE PROPOSED STORM SEWER SYSTEM.

A27 SPECIFIC POINTS WHERE PROPOSED STORMWATER DISCHARGE WILL LEAVE THE PROJECT SITE

STORMWATER RUNOFF FOR THE PROPOSED **18,190 SF STRUCTURE** WILL DRAIN VIA SHEET AND SHALLOW CONCENTRATED FLOW INTO STORM STRUCTURES WHERE IT WILL BE CONVEYED TO THE PROPOSED **UNDERGROUND DETENTION SYSTEM** ON THE **NORTH** SIDE OF THE SITE. THE **UNDERGROUND DETENTION SYSTEM** WILL DISCHARGE TO THE EAST TO **EXISTING STRUCTURE ON N. MARLEON DR.**

A28 LOCATION OF ALL LOTS AND PROPOSED SITE IMPROVEMENTS

REFER TO C3.X SERIES SITE PLAN(S).

A29 LOCATIONS OF PROPOSED SOIL STOCKPILES AND/OR BORROW/DISPOSAL AREAS

PROPOSED STOCKPILE LOCATIONS ARE SHOWN ON C4.X SERIES EROSION CONTROL PLAN(S).

A30 CONSTRUCTION SUPPORT ACTIVITIES

REFER TO C4.X SERIES EROSION CONTROL PLAN(S) FOR THE LOCATIONS OF ALL CONSTRUCTION SUPPORT ACTIVITIES ASSOCIATED WITH THIS PROJECT.

A31 LOCATION OF IN-STREAM ACTIVITIES

THIS PROJECT **DOES NOT** INCLUDES WORK WITHIN A STREAM. THESE LOCATIONS ARE SHOWN ON C5.X SERIES GRADING AND DRAINAGE PLAN(S).

SWPPP - CONSTRUCTION - SECTION B

B1 DESCRIPTION OF POTENTIAL POLLUTANT SOURCES ASSOCIATED WITH CONSTRUCTION ACTIVITIES

THE FOLLOWING POTENTIAL POLLUTANT SOURCES MAY BE ASSOCIATED WITH CONSTRUCTION ACTIVITIES AT THE PROJECT SITE:

1. SIGNIFICANT MATERIAL INVENTORY
   - 1.1. THE VEHICLES USED BY THE FACILITY POSE A THREAT TO STORMWATER RUNOFF. STORMWATER IN THE AREA COULD BE CONTAMINATED BY AUTOMOBILE FLUIDS CONTAINING HEAVY METALS, OIL, GREASE, AND ALCOHOLS. FUELING OF VEHICLES SHOULD OCCUR ONLY IN MAINTENANCE GARAGES, OR OTHER APPROVED LOCATIONS. CONCRETE PAVEMENT SHOULD BE LAID IN FUELING AREAS, AND APPROPRIATE DRAIN COLLECTION SYSTEMS (INDEPENDENT OF STORM SEWER SYSTEMS) SHALL BE INSTALLED. THE VEHICLES SHOULD BE MAINTAINED REGULARLY TO AVOID LEAKAGE.
   - 1.2. THE BITUMINOUS ASPHALT THAT IS BEING LAID ALSO POSES A POTENTIAL POLLUTION RISK. WHEN THE ASPHALT COMES IN CONTACT WITH RAINWATER, PETROLEUM SURFACTANTS CAN BE LIFTED FROM THE ASPHALT AND TRANSPORTED INTO THE STORM SEWER. THESE POLLUTANTS CAN BE HARMFUL TO ANIMALS.
2. POTENTIAL POLLUTANTS
   - 2.1. SOLID WASTE DISPOSAL - NO SOLID MATERIALS, INCLUDING BUILDING MATERIALS ARE ALLOWED TO BE DISCHARGED FROM THE SITE VIA STORMWATER. ALL SOLID WASTE, INCLUDING DISPOSABLE MATERIALS INCIDENTAL TO THE MAJOR CONSTRUCTION ACTIVITIES, MUST BE COLLECTED AND PLACED IN CONTAINERS. ALL CONTAINERS (DUMPSTERS) MUST BE COVERED. INDIANA'S SOLID WASTE REGULATIONS REQUIRE THAT CONSTRUCTION AND DEMOLITION WASTE BE TAKEN TO A PERMITTED SANITARY LANDFILL. NO LIQUIDS OR HAZARDOUS WASTE WILL BE ACCEPTED. THE CONTRACTOR SHALL CONTACT THE NEAREST IDEM FIELD OFFICE TO DETERMINE THE NEAREST PERMITTED SANITARY LANDFILL. NO RUBBLE MAY BE PLACED WITHIN WATERWAYS, FLOODPLAINS, OR WETLANDS WITHOUT IDEM OR JURISDICTION APPROVAL.
   - 2.2. SANITARY FACILITIES - ALL PERSONNEL INVOLVED WITH CONSTRUCTION ACTIVITIES MUST COMPLY WITH STATE AND LOCAL SANITARY OR SEPTIC SYSTEM REGULATIONS. TEMPORARY SANITARY FACILITIES WILL BE PROVIDED AT THE SITE THROUGHOUT THE CONSTRUCTION PHASE. THEY MUST BE UTILIZED BY ALL CONSTRUCTION PERSONNEL AND WILL BE SERVICED BY A COMMERCIAL OPERATOR.
   - 2.3. HAUL MATERIALS - ALL MATERIALS HAULED TO OR FROM THE SITE SHOULD BE SECURED TO PREVENT LITTERING AND ANY SPILLS MUST BE CLEANED UP IMMEDIATELY.
   - 2.4. CONCRETE/MASONRY - A CONCRETE/MASONRY WASHOUT SHALL BE PRESENT ONSITE. CONTRACTOR SHALL NOT USE UNLINED EARTHEN PITS BUT SHALL ENSURE THAT THE WASHOUT IS AN APPROPRIATE SIZE AND INCLUDES A LINING AND SOMETHING TO PREVENT THE POLLUTANTS FROM REACHING THE STORM SEWER SYSTEM AND THE SOILS ONSITE. A PREFABRICATED WASHOUT IS RECOMMENDED. TO PROLONG THE LIFE OF THE PREFABRICATED WASHOUTS, SCRAPINGS MAY BE STOCKPILED NEXT TO THE WASHOUT, PROVIDED THE WASHOUT AND STOCKPILE ARE REGULARLY MAINTAINED, LEGIBLY SIGNED WITH USE INSTRUCTIONS, AND THE AREA RESTORED TO PREVIOUS CONDITIONS WHEN FINISHED.
   - 2.5. LITTER - THE CONSTRUCTION SITE SHALL BE KEPT CLEAN AT ALL TIMES. MISCELLANEOUS LITTER POSES A THREAT TO SURROUNDING WATERWAYS AND IS AN AESTHETIC NUISANCE.
   - 2.6. SEDIMENT/ EXPOSED SOIL - ALL EXPOSED SOILS ARE TO BE TEMPORARILY SEEDED OR MULCHED SO AS TO NOT BE LEFT UNEXPOSED FOR MORE THAN 7 DAYS. PROJECT SITE IS TO HAVE SILT FENCE AND INLET PROTECTION FOR SEDIMENT CONTROL.

B2 STABLE CONSTRUCTION ENTRANCE LOCATIONS AND SPECIFICATIONS (AT ALL POINTS OF INGRESS AND EGRESS)

REFER TO C4.X SERIES EROSION CONTROL PLAN(S) FOR THE PROPOSED LOCATION OF THE CONSTRUCTION ENTRANCE(S). ENTRANCE(S) SHALL BE INSTALLED PRIOR TO ANY SITE WORK.

B3 TEMPORARY AND PERMANENT SURFACE STABILIZATION SPECIFICATIONS

TEMPORARY SURFACE STABILIZATION

1. TEMPORARY SEEDING
   - 1.1. TEMPORARY SEEDING IS THE PLANTING OF FAST-GROWING GRASSES TO HOLD DOWN THE SOILS IN DISTURBED AREAS SO THAT THEY ARE LESS LIKELY TO BE CARRIED OFFSITE BY STORMWATER RUNOFF OR WIND. WITHIN 7 DAYS AFTER CONSTRUCTION ACTIVITY CEASES ON ANY PARTICULAR AREA, ALL DISTURBED GROUND WHERE THERE WILL NOT BE CONSTRUCTION FOR LONGER THAN 7 DAYS MUST BE SEEDED WITH FAST-GERMINATING TEMPORARY SEED AND PROTECT WITH MULCH. IN THE EVENT OF SNOW COVER, STABILIZATION MEASURES MUST BE INITIATED AS SOON AS PRACTICABLE THEREAFTER. REFER TO PLANTING PLAN OR SEED CHART FOR RECOMMENDED SEED MIXTURE.
   - 1.2. ANNUAL RYEGRASS SHALL BE USED FROM MARCH THROUGH NOVEMBER. MIXTURE SHALL BE APPLIED AT THE RATE OF 40 LB/ACRE.
   - 1.3. SPRING MIX SHALL BE USED FROM MARCH THROUGH MAY. THIS MIXTURE SHALL BE APPLIED AT THE RATE OF 150 LB/ACRE. THIS MIX SHALL CONSIST OF OATS.
   - 1.4. FALL MIX SHALL BE USED FROM SEPTEMBER THROUGH NOVEMBER. THIS MIXTURE SHALL BE APPLIED AT A RATE OF 150 LB/ACRE. THIS MIX SHALL CONSIST OF WINTER WHEAT.

PERMANENT SURFACE STABILIZATION

THE PURPOSE OF SOIL STABILIZATION IS TO PREVENT SOIL FROM LEAVING THE SITE. IN THE NATURAL CONDITION, SOIL IS STABILIZED BY NATIVE VEGETATION. THE PRIMARY TECHNIQUE TO BE USED AT THIS SITE FOR STABILIZING SITE SOIL WILL BE TO PROVIDE A PROTECTIVE COVER OF TURF GRASS, PAVEMENT, OR BUILDING.

1. STEPS IN INSTALLING AND MAINTAINING PERMANENT SURFACE STABILIZATION MEASURES.
   - 1.1. SOIL PREPARATION - LOOSEN SOIL TO A DEPTH OF 6 INCHES. IF SOIL AMENDMENTS / FERTILIZERS ARE REQUIRED, APPLY AT MANUFACTURER'S RECOMMENDED APPLICATION RATE.
   - 1.2. FERTILIZER FOR LAWNS - PROVIDE A FAST-RELEASE FERTILIZER FOR LAWN APPLICATIONS.
   - 1.3. FERTILIZER FOR TREES / SHRUBS - PROVIDE A SLOW-RELEASE GRANULAR FERTILIZER FOR TREE / SHRUB APPLICATIONS.
   - 1.4. REMOVE TRASH, DEBRIS, STONES LARGER THAN 1 INCH IN DIAMETER, AND OTHER OBJECTS THAT MAY INTERFERE WITH PLANT ESTABLISHMENT. FINE GRADE SOIL SURFACE TO A SMOOTH FINISH. APPLY SEED USING A SPREADER OR SEEDING MACHINE AND DO NOT SEED WHEN WIND VELOCITIES ARE IN EXCESS OF 5 MPH. WHEN SOWING, APPLY IN TWO DIRECTIONS THAT ARE PERPENDICULAR TO EACH OTHER.
   - 1.5. RAKE SEED LIGHTLY INTO THE TOP 1/8 INCH OF SOIL, ROLL LIGHTLY, AND WATER WITH A FINE SPRAY.
   - 1.6. PROTECT FRESHLY SOWED SEED BY INSTALLING A LAYER OF CLEAN, SEED-FREE STRAW MULCH UNIFORMLY TO PROVIDE A BLANKET NOT LESS THAN 1 1/2 INCHES THICK.
   - 1.7. GENTLY WATER AREA TO KEEP STRAW MOIST UNTIL THE SEEDS HAVE ESTABLISHED.

B4 SEDIMENT CONTROL MEASURES FOR CONCENTRATED FLOW AREAS

DIVERSION SWALES, EROSION CONTROL BLANKET, ROCK DONUTS AND CHECK DAMS, AND TEMPORARY SEDIMENT BASINS WILL BE USED TO CONTROL SEDIMENT IN CONCENTRATED FLOW AREAS. SEE EROSION CONTROL PLANS SHEETS FOR LOCATIONS OF THESE MEASURES. EROSION CONTROL MEASURES ARE TO BE INSPECTED AFTER EVERY MAJOR RAINFALL EVENT TOTALING 1/2" OF RAIN OR MORE AND A MINIMUM OF ONCE A WEEK.

WATER REMOVED FROM TRAPS, BASINS, AND OTHER HOLDING DEPRESSIONS OR EXCAVATIONS MUST FIRST PASS THROUGH A SEDIMENT CONTROL AND/OR FILTRATION DEVICE. WHEN DEWATERING DEVICES ARE USED, DISCHARGE LOCATIONS SHALL BE PROTECTED FROM EROSION.

SILT FENCES AND STRAW BALES ARE NOT AN ACCEPTABLE MEASURES FOR CONCENTRATED FLOW PROTECTION.

B5 SEDIMENT CONTROL MEASURES FOR SHEET FLOW AREAS

REFER TO C4.X SERIES EROSION CONTROL PLAN(S) FOR SHEET FLOW AREAS TO BE PROTECTED BY SEEDING, MULCHING, SILT FENCE OR HYDROSEEDING. IF CONCENTRATED FLOW IS EXPERIENCED DUE TO INTERIM GRADING DURING CONSTRUCTION, CONTRACTOR SHALL UTILIZE EROSION CONTROL BLANKETS AND ROCK DONUTS AT INLET LOCATIONS TO SLOW RUNOFF AND REDUCE THE POTENTIAL FOR EROSION AND SEDIMENTATION.

B6 RUNOFF CONTROL MEASURES

REFER TO C4.X SERIES EROSION CONTROL PLAN(S) FOR RUNOFF CONTROL MEASURES.

AREAS OF CONCENTRATED FLOW WILL BE PROTECTED WITH PERMANENT RIP RAP AT PIPE OUTLETS AND EROSION CONTROL BLANKET IN SWALES.

B7 STORM WATER OUTLET PROTECTION SPECIFICATIONS

PLAN(S).

B8 GRADE STABILIZATION STRUCTURE LOCATIONS AND SPECIFICATIONS

RIP RAP AND TEMPORARY EROSION CONTROL BLANKET WILL BE UTILIZED TO PREVENT GRADE DESTABILIZATION. REFER TO C4.X SERIES EROSION CONTROL PLAN(S) AND EROSION CONTROL DETAILS FOR LOCATIONS.

B9 DEWATERING APPLICATIONS AND MANAGEMENT METHODS

IF THE DETENTION BASIN(S) ARE EXCAVATED PRIOR TO THE INSTALLATION OF THE STORMWATER OUTFALL PIPES, CONTRACTOR SHALL DEWATER BASIN(S) AS NECESSARY BY ROUTING FLOW THROUGH FILTER BAGS AND DISCHARGING TO THE GROUND SURFACE. CONTRACTOR SHALL MONITOR FLOW PATH DOWN TO OUTFALL TO ENSURE EROSION DOES NOT OCCUR.

B10 MEASURES UTILIZED FOR WORK WITHIN WATERBODIES

NO WORK IS BEING PROPOSED WITHIN ANY WATERBODIES.

B11 MONITORING AND MAINTENANCE GUIDELINES FOR EACH PROPOSED STORMWATER QUALITY MEASURE

INSPECTION SCHEDULE / REPORTING

1. ALL DISTURBED AREAS WITHIN THE PROJECT SITE, INCLUDING ALL EROSION AND SEDIMENT CONTROL DEVICES, SHALL BE INSPECTED EVERY 7 DAYS AND WITHIN 24 HOURS AFTER A RAINFALL EVENT TOTALING ½" OF RAIN OR MORE.
2. INSPECTIONS AND WRITTEN REPORTS SHALL BE PREPARED BY A QUALIFIED PERSON WHO IS FAMILIAR WITH THIS SWPPP, THE PROJECT, AND THE EPA NPDES STORM WATER GENERAL PERMIT. PAPER COPIES OF INSPECTIONS SHALL BE KEPT ON-SITE FOR INSPECTION BY LOCAL AND STATE OFFICIALS.
3. INSPECTION REPORTS SHALL INCLUDE:
   - 3.1. TYPE OF INSPECTION
   - 3.2. FIELD OBSERVATIONS
   - 3.3. ACTIONS TAKEN AS A RESULT OF INSPECTION RESULTS
   - 3.4. OVERALL ASSESSMENT OF SWPPP COMPLIANCE
   - 3.5. THE CONTRACTOR SHALL KEEP A COPY OF THE REPORTS ONSITE AND PERMANENTLY FOR A PERIOD OF 2 YEARS FOLLOWING CONSTRUCTION.
4. CONSTRUCTION ENTRANCE
   - 4.1. VERIFY ADEQUATE STONE COVERAGE
   - 4.2. VERIFY CONSTRUCTION ACTIVITIES ARE NOT TRACKING SITE SOIL OUT ONTO ADJACENT ROADWAYS
5. MATERIAL STORAGE
   - 5.1. VERIFY MATERIAL STORAGE AREAS ARE PROTECTED FROM RAINFALL
   - 5.2. VERIFY FLUID IS NOT LEAKING FROM THE AREA
   - 5.3. OFFSITE STORAGE AREAS ARE TO BE CONSIDERED PART OF THE PROJECT
6. SOIL STABILIZATION
   - 6.1. VERIFY THAT SEEDED AREAS EXHIBIT HEALTHY PLANT ESTABLISHMENT
   - 6.2. THE SITE HAS ACHIEVED FINAL STABILIZATION ONCE ALL AREAS ARE EITHER COVERED BY PAVEMENT OR HAVE REACHED 70% OF THE VEGETATION DENSITY. THIS VEGETATION DENSITY MUST BE MAINTAINED IN ORDER TO REMAIN CATEGORIZED AS FINAL STABILIZATION. MEASURES MUST BE TAKEN TO REACH THIS LEVEL IF STANDARD PROCEDURES DO NOT YIELD ADEQUATE PLANT ESTABLISHMENT.
7. EROSION AND SEDIMENT CONTROL INSPECTIONS - THE FOLLOWING IS A LIST OF INSPECTION / MAINTENANCE PRACTICES THAT SHOULD BE CONDUCTED FOR EACH CONTROL MEASURE:
8. GEOTEXTILES/EROSION CONTROL MATS - MISSING / LOOSE MATS SHALL BE REPLACED AND REINSTALLED PER MANUFACTURER'S RECOMMENDATION.
   - 8.1. INLET PROTECTION - INLET PROTECTION MEASURES SHALL BE ROUTINELY INSPECTED AND ACCUMULATED SEDIMENT SHALL BE REMOVED TO ENSURE PROPER OPERATION.
   - 8.2. DIVERSION SWALES - REMOVE ACCUMULATED DEBRIS THAT REDUCES THE HYDRAULIC CAPACITY OF THE SWALE.
   - 8.3. MULCHING - APPLY ADDITIONAL MULCH TO SPARSE OR BARE SPOTS.
   - 8.4. SEDIMENT TRAP - REMOVE ACCUMULATED SEDIMENT TO ENSURE PROPER OPERATION.
   - 8.5. SEDIMENT BASIN - REMOVE ACCUMULATED SEDIMENT TO ENSURE PROPER OPERATION.
   - 8.6. SILT FENCE - REMOVE ACCUMULATED SEDIMENT THAT POSES A THREAT TO THE STABILITY OF THE FENCE @ HEIGHT OF FENCE).
   - 8.7. CONSTRUCTION ENTRANCE - REDRESS ENTRANCE WITH ADDITIONAL STONE PERIODICALLY TO MAINTAIN FUNCTIONALITY.
   - 8.8. VEGETATION - ENSURE NEWLY SEEDED AREAS ARE PROTECTED FROM EROSION.
   - 8.9. GOOD HOUSEKEEPING - VERIFY THAT LITTER, MISCELLANEOUS CONSTRUCTION DEBRIS, CONSTRUCTION RELATED CHEMICALS, AND OTHER POTENTIALLY HARMFUL MATERIALS ARE PROPERLY STORED, COVERED, AND/OR DO NOT HAVE THE POTENTIAL TO ENTER THE STORM SEWER SYSTEM.
9. IF SEDIMENT ESCAPES THE CONSTRUCTION SITE, DOWNSTREAM SEDIMENT MUST BE REMOVED IMMEDIATELY TO REDUCE THE RISK OF ADVERSE IMPACTS.
10. BASED ON THE ACTUAL CONDITIONS OBSERVED ONSITE, ANY NECESSARY MODIFICATIONS TO THE PROJECT SWPPP SHALL BE IMPLEMENTED WITHIN 7 CALENDAR DAYS OF THE INSPECTION. ALL MODIFICATIONS TO THE SWPPP SHALL BE RECORDED BY THE CONTRACTOR AND SHALL BE PROVIDED UPON REQUEST.
11. IT IS THE OPERATOR'S SOLE RESPONSIBILITY TO ENSURE THE EROSION AND SEDIMENT CONTROL MEASURES ONSITE ARE SUFFICIENT TO MEET THE REQUIREMENTS OF THE EPA NPDES STORM WATER DISCHARGE PERMIT. IF ADDITIONAL MEASURES ARE REQUIRED, THE CONTRACTOR IS RESPONSIBLE FOR IMPLEMENTING SUCH MEASURES.

NOTICE OF TERMINATION (NOT)

12. COMPLIANCE WITH THE GENERAL CONSTRUCTION PERMIT IS THE RESPONSIBILITY OF THE OPERATOR / PERMITTEE WHO SUBMITTED THE NOI UNTIL A NOTICE OF TERMINATION (NOT) HAS BEEN PROCESSED. THE PERMITTEE'S AUTHORIZATION TO DISCHARGE UNDER THE GENERAL CONSTRUCTION PERMIT TERMINATES AT MIDNIGHT OF THE DAY THE NOT IS SIGNED.
13. ALL PERMITTEES MUST SUBMIT A NOT WITHIN 30 DAYS AFTER ONE OR MORE OF THE FOLLOWING CONDITIONS HAVE BEEN MET:
   - 13.1. FINAL STABILIZATION HAS BEEN ACHIEVED ONSITE
   - 13.2. ANOTHER OPERATOR / PERMITTEE HAS ASSUMED CONTROL OVER THE AREAS OF THE SITE THAT HAVE YET TO ACHIEVE FINAL STABILIZATION
   - 13.3. 13.3. IN RESIDENTIAL CONSTRUCTION OPERATIONS, TEMPORARY STABILIZATION HAS BEEN COMPLETED AND THE RESIDENCE HAS BEEN TRANSFERRED TO THE HOMEOWNER.

B12 SEQUENCE DESCRIBING STORMWATER QUALITY MEASURE IMPLEMENTATION RELATIVE TO LAND DISTURBING ACTIVITIES

1. FILE THE CONSTRUCTION STORMWATER GENERAL PERMIT (CSGP) WITH IDEM AT LEAST 48 HOURS PRIOR TO STARTING CONSTRUCTION.
2. INSTALL CONSTRUCTION ENTRANCE.
3. INSTALL SILT FENCE AND INLET PROTECTION AT INLETS.
4. POST NOI SIGN AT ENTRANCE.
5. DESIGNATE A PERSON TO BE RESPONSIBLE FOR SITE INSPECTIONS AFTER EACH RAINFALL AND A MINIMUM OF 1 TIME PER WEEK.
6. INSTALL STAGING AREA, FUELING STATION, MATERIAL STORAGE AREA, CONCRETE WASHOUT, AND PORT-O-LET.
7. STRIP TOPSOIL AND STOCKPILE.
8. REMOVE PAVEMENT AND OTHER ITEMS SHOWN TO BE DEMOLISHED.
9. ROUGH GRADE THE PROJECT SITE. SEED DISTURBED AREAS IMMEDIATELY FOLLOWING ROUGH GRADING. AREAS THAT WILL NOT BE DISTURBED AGAIN SHOULD BE PERMANENTLY SEEDED. NO UN-VEGETATED AREAS SHALL BE LEFT EXPOSED FOR MORE THAN 7 DAYS. TEMPORARY OR PERMANENT STABILIZATION METHODS MUST BE INITIATED BY END OF THE SEVENTH DAY THAT AN AREA HAS BEEN IDLE AND COMPLETED WITHIN 14 DAYS.
10. BEGIN SITE CONSTRUCTION.
11. INSTALL UNDERGROUND UTILITIES. EROSION CONTROL MEASURES SHALL BE INSTALLED AT NEW DRAIN INLET LOCATIONS IMMEDIATELY UPON INSTALLATION.
12. FINAL GRADE THE SITE.
13. PAVING OPERATIONS. EROSION CONTROL MEASURES SHALL BE LEFT IN-PLACE UNTIL THE SITE VEGETATION HAS ESTABLISHED.
14. REMOVE ALL TEMPORARY EROSION CONTROL MEASURES AT THE CONCLUSION OF THE PROJECT AS DIRECTED BY THE COUNTY AND THE NATIONAL POLLUTANT DISCHARGE ELIMINATION SYSTEM (NPDES) PERMIT.
15. LEAVE PERMANENT EROSION CONTROL MEASURES IN PLACE.

NOTE: THE SEQUENCE OF CONSTRUCTION SHOWN ABOVE IS A GENERAL OVERVIEW AND IS INTENDED TO CONVEY THE GENERAL CONCEPTS OF THE EROSION CONTROL DESIGN AND SHOULD NOT BE RELIED UPON FOR CONSTRUCTION PURPOSES. THE CONTRACTOR IS SOLELY RESPONSIBLE FOR DETAILED PHASING AND CONSTRUCTION SEQUENCING NECESSARY TO CONSTRUCT THE PROPOSED IMPROVEMENTS INCLUDED IN THESE PLANS. THE CONTRACTOR SHALL NOTIFY ENGINEER IN WRITING IMMEDIATELY, PRIOR TO AND/OR DURING CONSTRUCTION IF ANY ADDITIONAL INFORMATION ON THE CONSTRUCTION SEQUENCE IS NECESSARY. CONTRACTOR IS SOLELY RESPONSIBLE FOR COMPLYING WITH THE REQUIREMENTS OF THE AUTHORITY HAVING JURISDICTION AND ALL OTHER APPLICABLE LAWS.

B13 EROSION & SEDIMENT CONTROL SPECIFICATIONS FOR INDIVIDUAL BUILDING LOTS

THE ENTIRE PROJECT SITE IS UNDER THE SAME OWNER, THERE ARE NOT ANY INDIVIDUAL BUILDING LOTS.

B14 MATERIAL HANDLING AND SPILL PREVENTION PLAN

1. SOIL TRACKING
   - 1.1. CONSTRUCTION TRAFFIC MUST ENTER AND EXIT THE SITE AT THE STABILIZED CONSTRUCTION ENTRANCE. A WHEEL WASH SHALL BE USED BY THE CONTRACTOR IF REQUESTED BY THE MUNICIPALITY. PRIOR TO LEAVING THE SITE, THE PURPOSE IS TO TRAP DUST AND MUD THAT WOULD OTHERWISE BE CARRIED OFF-SITE BY CONSTRUCTION TRAFFIC. ALL DIRT TRACKED ONTO PUBLIC AND PRIVATE STREETS SHALL BE CLEANED BY THE END OF DAY AT A MINIMUM.
2. DUST CONTROL
   - 2.1. WATER TRUCKS WILL BE USED AS NEEDED DURING CONSTRUCTION TO REDUCE DUST GENERATED ON THE SITE. DUST CONTROL MUST BE PROVIDED BY THE GENERAL CONTRACTOR TO A DEGREE THAT IS IN COMPLIANCE WITH APPLICABLE LOCAL AND STATE DUST CONTROL REGULATIONS. AFTER CONSTRUCTION, THE SITE WILL BE STABILIZED (AS DESCRIBED ELSEWHERE), WHICH WILL REDUCE THE POTENTIAL FOR DUST GENERATION.
3. WATER SOURCE
   - 3.1. NON-STORMWATER COMPONENTS OF SITE DISCHARGE MUST BE CLEAN WATER. WATER USED FOR CONSTRUCTION, WHICH DISCHARGES FROM THE SITE MUST ORIGINATE FROM A PUBLIC WATER SUPPLY OR PRIVATE WELL APPROVED BY THE STATE HEALTH DEPARTMENT. WATER USED FOR CONSTRUCTION THAT DOES NOT ORIGINATE FROM AN APPROVED PUBLIC SUPPLY MUST NOT DISCHARGE FROM THE SITE. IT CAN BE RETAINED IN THE PONDS UNTIL IT INFILTRATES AND EVAPORATES.
4. CONCRETE WASTE FROM CONCRETE READY-MIX TRUCKS
   - 4.1. DISCHARGE OF EXCESS OR WASTE CONCRETE AND/OR WASH WATER FROM CONCRETE TRUCKS WILL BE ALLOWED ON THE CONSTRUCTION SITE, BUT ONLY IN SPECIFICALLY DESIGNATED DIKED AREAS THAT HAVE BEEN PREPARED TO PREVENT CONTACT BETWEEN THE CONCRETE AND/OR WASH WATER AND STORMWATER THAT WILL BE DISCHARGED FROM THE SITE OR IN LOCATIONS WHERE WASTE CONCRETE CAN BE PLACED INTO FORMS TO MAKE RIPRAP OR OTHER USEFUL CONCRETE PRODUCTS. THE CURED RESIDUE FROM THE CONCRETE WASHOUT DIKED AREAS SHALL BE DISPOSED IN ACCORDANCE WITH APPLICABLE STATE AND FEDERAL REGULATIONS. THE JOBSITE SUPERINTENDENT IS RESPONSIBLE FOR ASSURING THAT THESE PROCEDURES ARE FOLLOWED.
   - 5.1. TEMPORARY ON-SITE FUEL TANKS FOR CONSTRUCTION VEHICLES SHALL MEET ALL STATE AND FEDERAL REGULATIONS. TANKS SHALL HAVE APPROVED SPILL CONTAINMENT WITH THE CAPACITY REQUIRED BY THE APPLICABLE REGULATIONS. THE TANK SHALL BE IN SOUND CONDITION FREE OF RUST OR OTHER DAMAGE WHICH MIGHT COMPROMISE CONTAINMENT. HOSES, VALVES, FITTINGS, CAPS, FILLER NOZZLES, AND ASSOCIATED HARDWARE SHALL BE MAINTAINED IN PROPER WORKING CONDITION AT ALL TIMES.
6. MASONRY WASTES
   - 6.1. CLEANING MASONRY TOOLS AND EQUIPMENT GENERATE A VARIETY OF WASTES. EXCESS CEMENT AND RINSE WATER ARE TWO EXAMPLES. SWEEP STREETS, GUTTERS, ALLEYS, AND SIDE

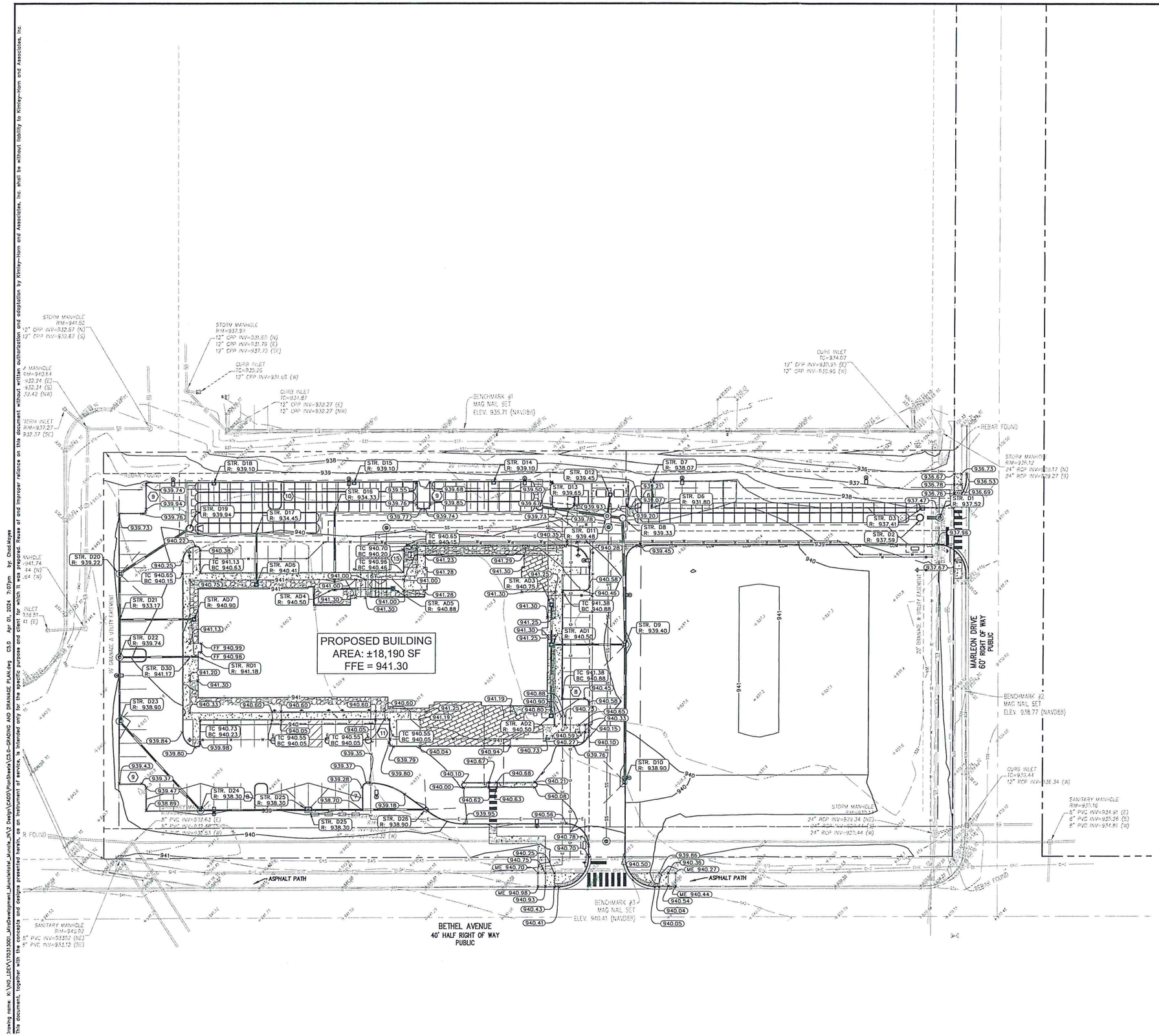

Indiana Utilities Protection Service

Call 811 before you dig

NORTH

GRAPHIC SCALE IN FEET
0 15' 30' 60'

GRADING LEGEND

XXX.XX	FINISHED GRADE SPOT ELEVATION
TC XXX.XX / BC XXX.XX	TOP OF CURB / BOTTOM OF CURB SPOT ELEVATION
FL XXX.XX	FLOW LINE SPOT ELEVATION
ME XXX.XX	MATCH EXISTING SPOT ELEVATION
FF XXX.XX	FINISHED FLOOR SPOT ELEVATION
FG XXX.XX	FINISHED GRADE NEAR BUILDING SPOT ELEVATION
TW XXX.XX	TOP OF WALL SPOT ELEVATION
BW XXX.XX	BOTTOM OF WALL SPOT ELEVATION
R XXX.XX	RIM ELEVATION
STR XX / R XXX.XX	STRUCTURE ID & RIM ELEVATION
STR XX / INV XXX.XX	STRUCTURE ID & INVERT ELEVATION
620	PROPOSED CONTOUR
RIDGE	RIDGE LINE
X.XX%	SLOPE AND FLOW DIRECTION
	100-YEAR OVERLAND OVERFLOW ROUTE
	DETENTION BASIN 100-YEAR EMERGENCY
	PROPOSED SWALE
	PROPOSED STORM SEWER
	PROPOSED STORM STRUCTURES
	PROPOSED SANITARY MANHOLE
	PROPOSED STORM/SANITARY CLEANOUT
	PROPOSED WATER STRUCTURES
	PROPOSED LIGHT POLES
	PROPOSED TRANSFORMER PAD

EXISTING LEGEND

BOLLARD	MISC LID	YARD LIGHT
CONTROL BENCHMARK	MONITOR WELL	SANITARY CLEANOUT
ROW MONUMENT	GAS MARKER	SANITARY MANHOLE
FLAG POLE	GAS METER	VENT PIPE
MAIL BOX	GAS VALVE	STORM CURB INLET
UTILITY POLE	AC UNIT	STORM INLET
POST	AREA LIGHT	STORM ROOF DRAIN
SOIL BORING	ELECTRICAL BOX	STORM DRAIN MANHOLE
HANDICAP SYMBOL	ELECTRICAL HAND HOLE	STORM YARD DRAIN
SIGN	ELECTRICAL METER	FIRE DEPT CONNECTION
CABLE MANHOLE	ELECTRICAL MANHOLE	FIRE HYDRANT
CABLE PEDESTAL	ELECTRICAL MARKER	IRRIGATION VALVE
TELEPHONE PEDESTAL	ELECTRICAL TRANSFORMER	POST INDICATOR VALVE
TELEPHONE HAND HOLE	GUY POLE/WIRE	WELL
TELEPHONE MARKER	POWER POLE	WATER METER
TELEPHONE MANHOLE	TRAFFIC SIGNAL POLE	WATER VALVE
FIBER OPTIC MAKER	TRAFFIC MANHOLE	TREE / STUMP

SWALE		TS	TOE OF SLOPE
X	FENCE LINE	TB	TOP OF BANK
SS	SANITARY SEWER	FIB	UNDERGROUND FIBER OPTIC
SD	STORM DRAIN	OHE	OVERHEAD ELECTRICAL
W	WATER LINE	GAS	UNDERGROUND GAS
	TREE LINE	TEL	UNDERGROUND TELEPHONE

BENCHMARKS

SITE BENCHMARKS:
(LOCATIONS SHOWN ON SURVEY)

BENCHMARK #1 MAG NAIL SET ALONG NORTH PROPERTY LINE
ELEVATION=935.71 (NAVD88)

BENCHMARK #2 MAG NAIL SET ALONG EAST PROPERTY LINE IN MARLEON ROW
ELEVATION=938.77 (NAVD88)

BENCHMARK #3 MAG NAIL SET ALONG IN BETHEL AVE ROW IN ASPHALT TRAIL
ELEVATION=940.41 (NAVD88)

GENERAL PLAN NOTES

REFER TO GENERAL NOTES SHEET FOR MORE INFORMATION INCLUDING THE FOLLOWING: (EXISTING LEGEND, BENCHMARK INFORMATION, AND SPECIFIC GENERAL PLAN NOTES.)

No.	REVISIONS	DATE	BY

Kimley»Horn
©2024 KIMLEY-HORN AND ASSOCIATES, INC.
11590 N. MERIDIAN ST. SUITE 300,
INDIANAPOLIS, IN 46240
PHONE: 317-218-9560
WWW.KIMLEY-HORN.COM

SCALE: AS NOTED
DESIGNED BY: CSM
DRAWN BY: GWE
CHECKED BY: CSM

CHAD STEVEN MOYER REGISTERED PROFESSIONAL ENGINEER INDIANA
NOT APPROVED FOR CONSTRUCTION

MIRA DEVELOPMENT

GRADING AND DRAINAGE PLAN

HOME2 SUITES
MUNCIE HOTEL
NWC BETHEL AVE & N MARLEON DR
MUNCIE, IN 47304

ORIGINAL ISSUE: 08/04/2023
KHA PROJECT NO. 170313001
SHEET NUMBER
C5.0

Drawing name: K:\IND_LDEV\170313001_MiraDevelopment_MuncieHotel_Muncie_IN\2 Design\CADD\PlanSheets\C5.0-GRADING AND DRAINAGE PLAN.dwg C5.0 Apr 01, 2024 7:07pm by: Chad.Moyer
This document, together with the concepts and designs presented herein, as an instrument of service, is intended only for the specific purpose and client for which it was prepared. Reuse of and improper reliance on this document without written authorization and adaptation by Kimley-Horn and Associates, Inc. shall be without liability to Kimley-Horn and Associates, Inc.

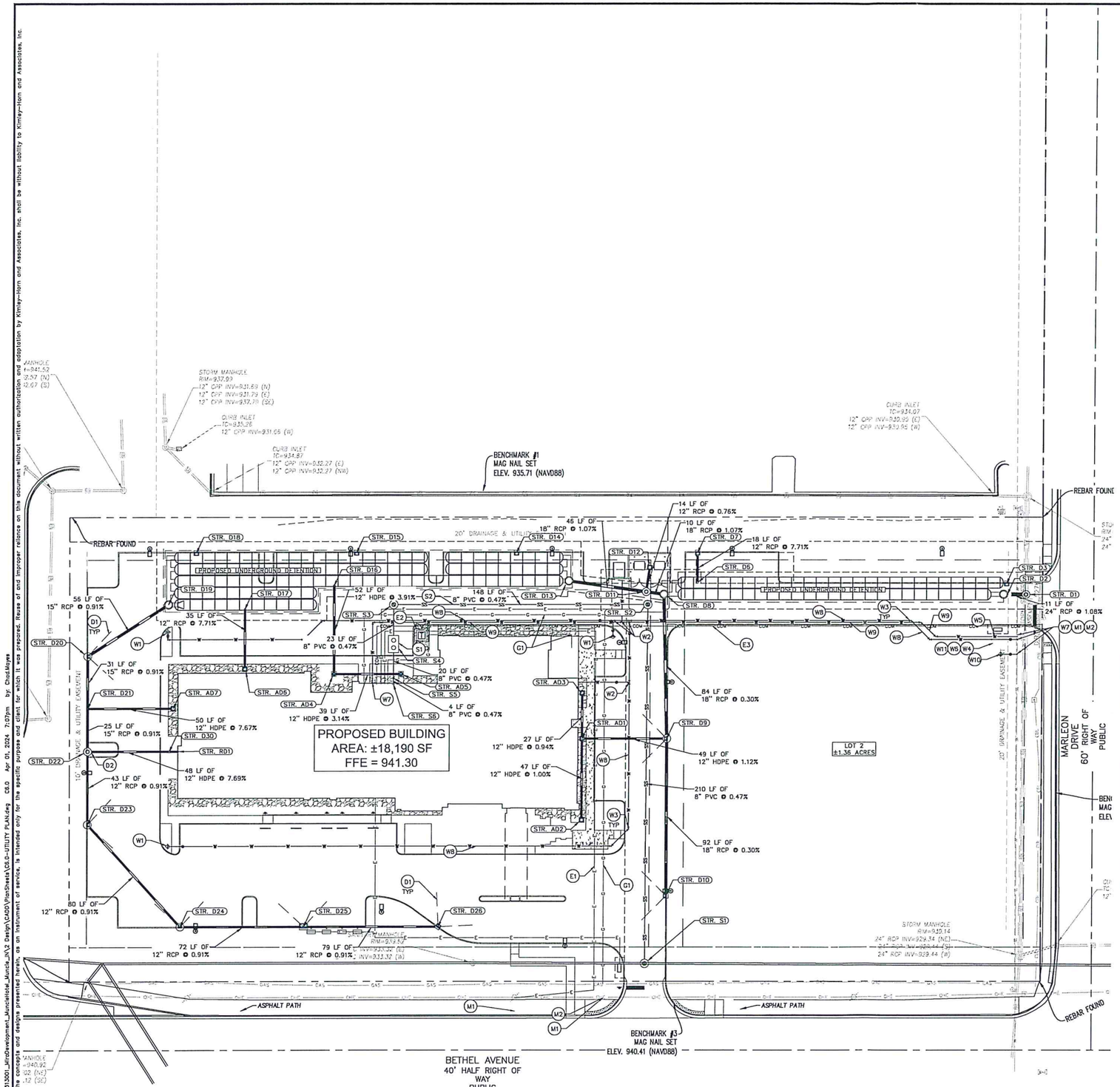

Indiana Utilities Protection Service
Call 811 before you dig

NORTH

GRAPHIC SCALE IN FEET
0 15' 30' 60'

UTILITY LEGEND

- PROPOSED UNDERGROUND ELECTRIC LINE
- PROPOSED GAS LINE (BY GAS COMPANY)
- PROPOSED PHONE LINE
- PROPOSED ROOF DRAIN LINE
- PROPOSED UNDERDRAIN
- PROPOSED SWALE
- PROPOSED STORM SEWER LINE
- STRUCTURE ID
- PROPOSED STORM STRUCTURES
- PROPOSED SANITARY SEWER LINE
- PROPOSED SANITARY LATERAL LINE
- PROPOSED SANITARY MANHOLE
- PROPOSED STORM/SANITARY CLEANOUT
- PROPOSED WATER LINE
- PROPOSED FIRE PROTECTION LINE
- PROPOSED WATER VALVE BOX, PIV, METER FIRE HYDRANT, FIRE DEPT CONN. & VAULT
- PROPOSED WATER BENDS & TEE
- PROPOSED LIGHT POLE
- PROPOSED TRANSFORMER PAD (BY OTHERS)

KEY NOTES

(D) DRAINAGE STORM SEWER
D1. PERFORATED UNDERDRAIN (SEE DETAILS)
D2. CONNECT ROOF DRAIN TO STRUCTURE (INVERT)
(S) SANITARY SEWER
S1. 250 GALLON SANITARY GREASE TRAP
S2. 8" PVC SDR 35 SANITARY LATERAL LINE
(W) WATER LINE
W1. FIRE HYDRANT AND VALVE ASSEMBLY (RED PAINTED–PRIVATE)
W2. WATER TEE
W3. WATER BEND
W4. SHORT SIDE WATER VAULT (REFER TO DETAILS)
W5. WATER METER (REFER TO DETAILS)
W6. FIRE DEPT CONNECTION (FDC)
W7. CONNECT TO EXISTING WATER (TAPPING SLEEVE & VALVE OR TEE)
W8. 6" WATER FIRE SERVICE
W9. 3" DOMESTIC WATER SERVICE
W10. FIRE HYDRANT AND VALVE ASSEMBLY (PUBLIC)
W11. POST INDICATOR VALVE WITH BUILDING ADDRESS (PIV)
(G) GAS LINE
G1. GAS SERVICE LINE
(E) ELECTRIC / TELEPHONE / CABLE
E1. ELECTRIC SERVICE LINE
E2. ELECTRIC TRANSFORMER
E3. TELECOMMUNICATIONS LINE
MISCELLANEOUS
M1. CONTRACTOR TO COORDINATE CONNECTION WITH UTILITY PROVIDER.
M2. CONTRACTOR TO FIELD VERIFY LOCATION, DEPTH AND SIZE OF EXISTING UTILITY TO ENSURE CONFLICTS DO NOT EXIST WITH PROPOSED UTILITIES.
M3. POTENTIAL UTILITY CONFLICT. ALL (WATER, SANITARY, DRAINAGE STORM) CROSSINGS TO HAVE 18" MIN. VERTICAL CLEARANCE. ALL WATER SERVICE LINES TO REMAIN PERPENDICULAR AT CROSSING IN SUCH THAT IT FORMS AN ANGLE BETWEEN 45° AND 90°.

NOTE: CONTRACTOR TO VERIFY WATER, SANITARY, GAS, & ETC LOCATIONS, SIZES AND TYPES WITH MEP PLANS PRIOR TO ORDERING MATERIALS.

EXISTING LEGEND

BOLLARD	MISC LID	YARD LIGHT
CONTROL BENCHMARK	MONITOR WELL	SANITARY CLEANOUT
ROW MONUMENT	GAS MARKER	SANITARY MANHOLE
FLAG POLE	GAS METER	VENT PIPE
MAIL BOX	GAS VALVE	STORM CURB INLET
UTILITY POLE	AC UNIT	STORM INLET
POST	AREA LIGHT	STORM ROOF DRAIN
SOIL BORING	ELECTRICAL BOX	STORM DRAIN MANHOLE
HANDICAP SYMBOL	ELECTRICAL HAND HOLE	STORM YARD DRAIN
SIGN	ELECTRICAL METER	FIRE DEPT CONNECTION
CABLE MANHOLE	ELECTRICAL MANHOLE	FIRE HYDRANT
CABLE PEDESTAL	ELECTRICAL MARKER	IRRIGATION VALVE
TELEPHONE PEDESTAL	ELECTRICAL TRANSFORMER	POST INDICATOR VALVE
TELEPHONE HAND HOLE	GUY POLE/WIRE	WELL
TELEPHONE MARKER	POWER POLE	WATER METER
TELEPHONE MANHOLE	TRAFFIC SIGNAL POLE	WATER VALVE
FIBER OPTIC MAKER	TRAFFIC MANHOLE	TREE / STUMP
SWALE		TOE OF SLOPE
FENCE LINE		TOP OF BANK
SANITARY SEWER		UNDERGROUND FIBER OPTIC
STORM DRAIN		OVERHEAD ELECTRICAL
WATER LINE		UNDERGROUND GAS
TREE LINE		UNDERGROUND TELEPHONE

GENERAL PLAN NOTES

REFER TO GENERAL NOTES SHEET FOR MORE INFORMATION INCLUDING THE FOLLOWING: (EXISTING LEGEND, BENCHMARK INFORMATION, AND SPECIFIC GENERAL PLAN NOTES.)

No.	REVISIONS	DATE	BY

Kimley»Horn
©2024 KIMLEY-HORN AND ASSOCIATES, INC.
9465 KEYSTONE CROSSING, SUITE 300,
INDIANAPOLIS, IN 46240
PHONE: 317-218-9560
WWW.KIMLEY-HORN.COM

SCALE: AS NOTED
DESIGNED BY: CSM
DRAWN BY: CWE
CHECKED BY: CSM

CHAD STEVEN MAYES REGISTERED PROFESSIONAL ENGINEER INDIANA
NOT APPROVED FOR CONSTRUCTION

MIRA DEVELOPMENT

UTILITY PLAN

HOME2 SUITES MUNCIE HOTEL
NWC BETHEL AVE & N MARLEON DR
MUNCIE, IN 47304

ORIGINAL ISSUE: 08/04/2023
KHA PROJECT NO. 170313001
SHEET NUMBER
C6.0

Drawing name: K:\IND_LDEV\170313001_MiraDevelopment_MuncieHotel_Muncie_IN\2 Design\CADD\PlanSheets\C6.0-UTILITY PLAN.dwg C6.0 Apr 01, 2024 7:07pm by ChadMayes
This document, together with the concepts and designs presented herein, as an instrument of service, is intended only for the specific purpose and client for which it was prepared. Reuse of and improper reliance on this document without written authorization and adaptation by Kimley-Horn and Associates, Inc. shall be without liability to Kimley-Horn and Associates, Inc.

Indiana Utilities Protection Service
Call 811
before you dig

STORM SEWER STRUCTURE DATA TABLE
NOTE: DEBRIS GUARD REQUIRED ON ALL END SECTIONS
ALL CASTINGS SHALL BE LABELED "DUMP NO WASTE-DRAINS TO WATERWAY"

STR. NO:	STRUCTURE/CASTING TYPE NOTE: NEENAH CASTINGS	T.O.R.	INCOMING PIPE DATA (DIRECTION) [FROM STR]	OUTGOING PIPE DATA (DIRECTION) [TO STR]	OUTGOING PIPE L.F.	OUTGOING PIPE SIZE	OUTGOING GRADE (%)	CONNECT TO STRUCTURE	REMARKS	NORTHING	EASTING
AD1	TYPE "A" INLET – R-3472	940.50	12" HDPE 933.09 (SW) [AD2] 12" HDPE 936.45 (NE) [AD3]	12" HDPE 933.09 (SE) [D9]	49'	12"	1.12%	D9		1811452.99	392116.44
AD2	TYPE "A" INLET – R-3472	940.50		12" HDPE 933.56 (NE) [AD1]	47'	12"	1.00%	AD1		1811410.14	392096.02
AD3	TYPE "A" INLET – R-3472	940.75		12" HDPE 936.70 (SW) [AD1]	27'	12"	0.94%	AD1		1811476.96	392127.86
AD4	TYPE "A" INLET – R-4342	940.50	12" HDPE 935.23 (SE) [AD5]	12" HDPE 935.23 (NE) [D16]	52'	12"	3.91%	D16		1811549.36	392002.05
AD5	TYPE "A" INLET – R-4342	940.88		12" HDPE 936.45 (NW) [AD4]	39'	12"	3.14%	AD4		1811532.61	392037.19
AD6	TYPE "A" INLET – R-3472	940.41		12" RCP 935.90 (NE) [D17]	35'	12"	7.71%	D17		1811574.43	391956.41
AD7	TYPE "A" INLET – R-3472	940.90		12" HDPE 935.85 (NW) [D21]	50'	12"	7.67%	D21		1811571.50	391909.01
D1	TYPE "C" MH – R-1772	937.52	24" RCP 929.28 (SW) [43] 24" RCP 929.38 (NW) [D2]	24" RCP 929.28 (NE) [44]	57'	24"	0.03%	44		1811417.72	392386.40
D2	OUTLET CONTROL STR	937.59		24" RCP 929.50 (SE) [D1]	11'	24"	1.08%	D1		1811422.48	392376.64
D3	TYPE "A" INLET – R-3010	937.41								1811428.45	392378.93
D7	TYPE "A" INLET – R-3010	938.07		12" RCP 931.90 (SW) [D6]	18'	12"	7.71%	D6		1811522.38	392223.68
D9	TYPE "C" MH – R-3010	939.40	18" RCP 930.75 (SW) [D10] 12" HDPE 932.53 (NW) [AD1]	18" RCP 930.75 (NE) [D8]	84'	18"	0.30%	D8		1811431.69	392161.12
D10	TYPE "A" INLET – R-3010	938.90		18" RCP 931.03 (NE) [D9]	92'	18"	0.30%	D9		1811348.94	392121.68
D11	TYPE "C" MH – R-1772	939.48	18" RCP 930.61 (NW) [D13] 12" RCP 932.12 (NE) [D12]	18" RCP 930.61 (SE) [D8]	10'	18"	1.07%	D8		1811514.58	392186.78
D12	TYPE "A" INLET – R-3472	939.45		12" RCP 932.23 (SW) [D11]	14'	12"	0.76%	D11		1811526.63	392194.76
D14	TYPE "A" INLET – R-3010	939.10								1811567.82	392128.34
D15	TYPE "A" INLET – R-3010	939.10								1811607.90	392044.24
D16	INSERTA TEE		12" HDPE 933.20 (SW) [AD4]							1811596.15	392024.35
D17	INSERTA TEE		12" RCP 933.20 (SW) [AD6]							1811606.02	391971.47
D18	TYPE "A" INLET – R-3010	939.10								1811647.99	391960.13
D20	TYPE "C" MH – R-3010	939.22	15" RCP 931.51 (SW) [D21]	15" RCP 931.51 (E) [D19]	56'	15"	0.91%	D19		1811620.48	391877.23
D21	INSERTA TEE		15" RCP 931.78 (SW) [D22] 12" HDPE 932.03 (SE) [AD7]	15" RCP 931.78 (NE) [D20]	31'	15"	0.91%	D20		1811592.91	391864.09
D22	TYPE "C" MH – R-1772	939.74	12" RCP 932.01 (SW) [D23] 12" HDPE 932.51 (SE) [D30]	15" RCP 932.01 (NE) [D21]	25'	15"	0.91%	D21		1811570.26	391853.30
D23	TYPE "C" MH – R-3010	938.90	12" RCP 932.40 (S) [D24]	12" RCP 932.40 (NE) [D22]	43'	12"	0.91%	D22		1811531.77	391834.96
D24	TYPE "C" MH – R-3010	938.30	12" RCP 933.13 (SE) [D25]	12" RCP 933.13 (N) [D23]	80'	12"	0.91%	D23		1811454.66	391858.03
D25	TYPE "B" INLET – R-3287-15	938.30	12" RCP 933.79 (SE) [D26]	12" RCP 933.79 (NW) [D24]	72'	12"	0.91%	D24		1811423.68	391923.02
D26	TYPE "A" INLET – R-3010	938.90		12" RCP 934.50 (NW) [D25]	79'	12"	0.91%	D25		1811389.87	391993.96
D30	STORM CLEANOUT	941.17	12" HDPE 936.17 (SE) [RD1]	12" HDPE 936.17 (NW) [D22]	48'	12"	7.69%	D22		1811549.82	391895.19
RD1	ROOF DRAIN	941.18		12" HDPE 936.55 (NW) [D30]	5'	12"	7.69%	D30		1811547.67	391900.70

SANITARY SEWER STRUCTURE DATA TABLE

STR. NO:	STRUCTURE/CASTING TYPE NOTE: NEENAH CASTINGS	T.O.R.	INCOMING PIPE DATA (DIRECTION) [FROM STR]	OUTGOING PIPE DATA (DIRECTION) [TO STR]	OUTGOING PIPE L.F.	OUTGOING PIPE SIZE	OUTGOING GRADE (%)	CONNECT TO STRUCTURE	REMARKS
S1	48" SAN MH	940.32	8" PVC 933.70 (SE) [65] 8" PVC 933.70 (NE) [S2]	8" PVC 933.70 (NW) [66]	100'	8"	0.38%	66	
S2	48" SAN MH	939.61	8" PVC 934.68 (NW) [S3]	8" PVC 934.68 (SW) [S1]	210'	8"	0.47%	S1	
S3	48" SAN MH	939.92	8" PVC 935.38 (SW) [S4]	8" PVC 935.38 (SE) [S2]	148'	8"	0.47%	S2	
S4	250 GALLON SAN GREASE TRAP	940.57	8" PVC 935.57 (SW) [S5]	8" PVC 935.49 (NE) [S3]	23'	8"	0.47%	S3	
S5	6" SAN CO	940.69	8" PVC 935.66 (SW) [S6]	8" PVC 935.66 (NE) [S4]	20'	8"	0.47%	S4	
S6	CONNECT TO BUILDING	940.80		8" PVC 935.68 (NE) [S5]	4'	8"	0.47%	S5	

No.	REVISIONS	DATE	BY

Kimley»Horn
© 2024 KIMLEY-HORN AND ASSOCIATES, INC.
500 EAST 96TH STREET, SUITE 300,
INDIANAPOLIS, IN 46240
PHONE: 317-218-9560
WWW.KIMLEY-HORN.COM

SCALE: AS NOTED
DESIGNED BY: CSM
DRAWN BY: GWE
CHECKED BY: CSM

CHAD STEVEN MOYER REGISTERED PROFESSIONAL ENGINEER INDIANA
NOT APPROVED FOR CONSTRUCTION

MIRA DEVELOPMENT

UTILITY PLAN

HOME2 SUITES
MUNCIE HOTEL
NWC BETHEL AVE & N MARLEON DR
MUNCIE, IN 47304

ORIGINAL ISSUE: 08/04/2023
KHA PROJECT NO. 170313001
SHEET NUMBER
C6.1

rawing name: K:\IND_LDEV\170313001_MiraDevelopment_MuncieHotel_Muncie_IN\2 Design\CADD\PlanSheets\C6.0-UTILITY PLAN.dwg C6.1 STRUCTURE DETAILS Apr 01, 2024 7:07pm by: ChadMoyer
his document, together with the concepts and designs presented herein, as an instrument of service, is intended only for the specific purpose and client for which it was prepared. Reuse of and improper reliance on this document without written authorization and adaptation by Kimley-Horn and Associates, Inc. shall be without liability to Kimley-Horn and Associates, Inc.

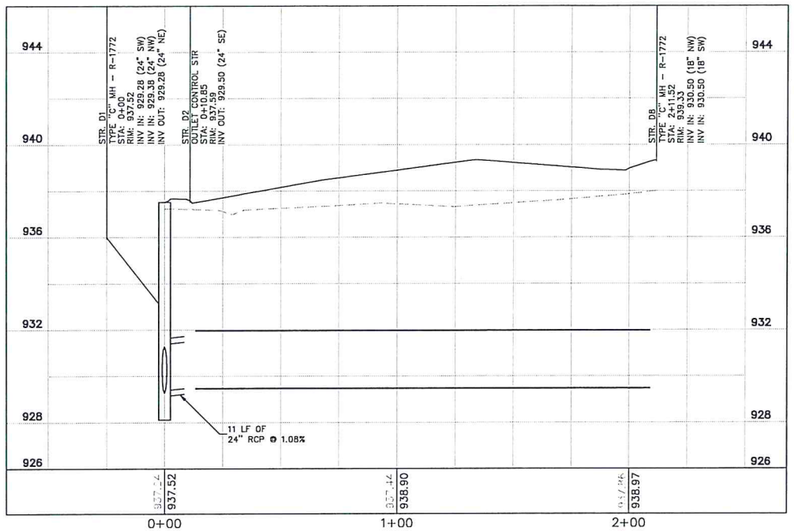

STORM LINE 1
H: 1"=30 | V: 1"=3

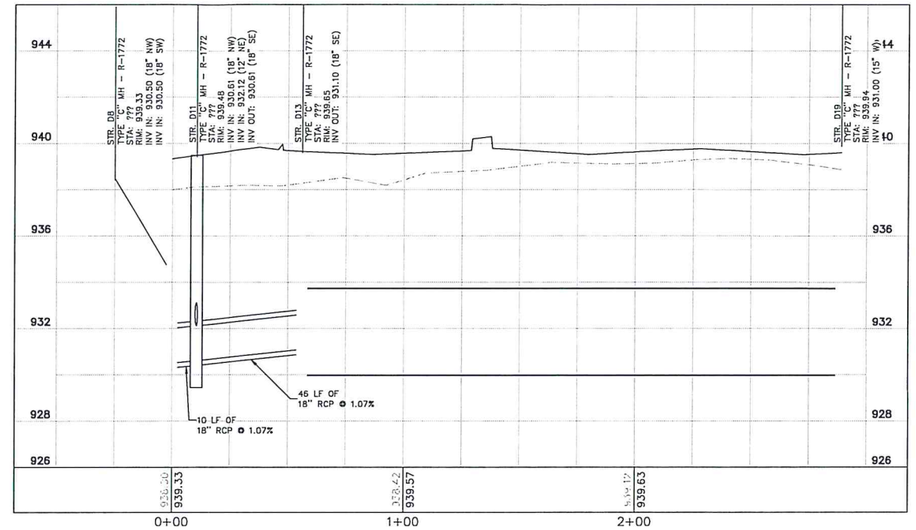

STORM LINE 2
H: 1"=30 | V: 1"=3

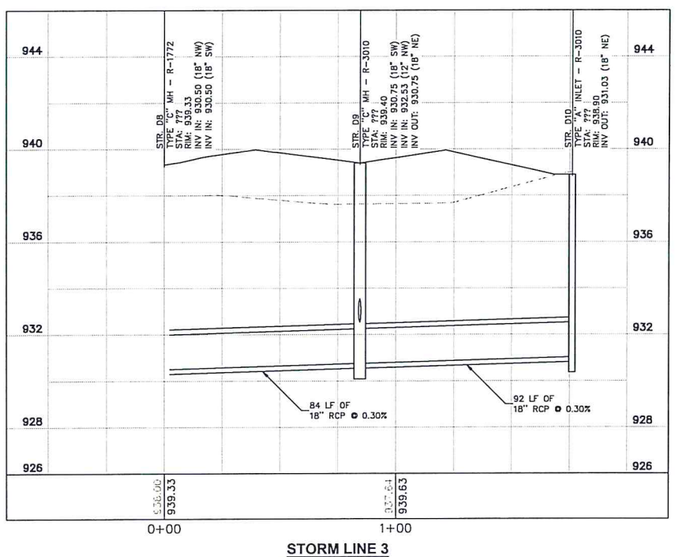

STORM LINE 3
H: 1"=30 | V: 1"=3

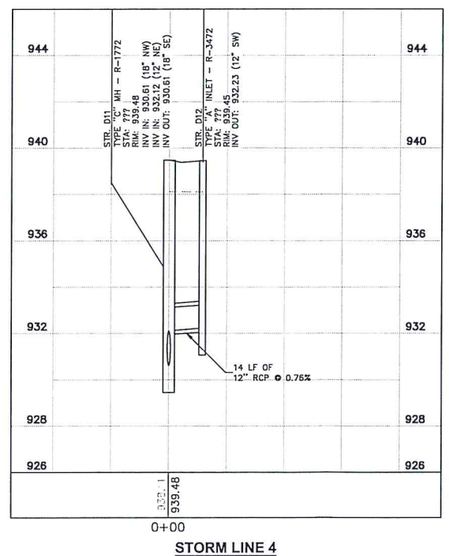

STORM LINE 4
H: 1"=30 | V: 1"=3

PROFILE LEGEND

- FULL DEPTH GRANULAR BACKFILL REQUIRED (PROFILE VIEW)
- EXISTING PROFILE GRADE
- PROPOSED PROFILE GRADE

Indiana Utilities Protection Service
Call 811
before you dig

No.	REVISIONS	DATE	BY

Kimley»Horn
©2024 KIMLEY-HORN AND ASSOCIATES, INC.
10401 N. MERIDIAN STREET, SUITE 300,
INDIANAPOLIS, IN 46290
PHONE: 317-218-9560
WWW.KIMLEY-HORN.COM

SCALE: AS NOTED
DESIGNED BY: CSM
DRAWN BY: CWE
CHECKED BY: CSM

CHAD STEVEN MOYER REGISTERED INDIANA PROFESSIONAL ENGINEER
NOT FOR CONSTRUCTION UNTIL APPROVED BY ENGINEER

MIRA DEVELOPMENT

UTILITY PROFILES

HOME2 SUITES MUNCIE HOTEL
NWC BETHEL AVE & N MARLEON DR
MUNCIE, IN 47304

ORIGINAL ISSUE: 08/04/2023
KHA PROJECT NO. 170313001
SHEET NUMBER
C6.2

Drawing name: K:\IND_LDEV\170313001_MiraDevelopment_Muncie\Muncie_NV2 Design\CADD\PlanSheets\C6.1-UTILITY PROFILES.dwg C6.2 Apr 01, 2024 7:07pm by: ChadMoyer
This document, together with the concepts and designs presented herein, as an instrument of service, is intended only for the specific purpose and client for which it was prepared. Reuse of and improper reliance on this document without written authorization and adaptation by Kimley-Horn and Associates, Inc. shall be without liability to Kimley-Horn and Associates, Inc.

drawing name: K:\IND_LDEV\170313001_MuncieDevelopment_MuncieHotel_Muncie_IN\2 Design\C400\PlanSheets\C6.1-UTILITY PROFILES.dwg C6.3 Apr 01, 2024 7:07pm by: ChadMeyer
This document, together with the concepts and designs presented herein, as an instrument of service, is intended only for the specific purpose and client for which it was prepared. Reuse of and improper reliance on this document without written authorization and adaptation by Kimley-Horn and Associates, Inc. shall be without liability to Kimley-Horn and Associates, Inc.

Indiana Utilities Protection Service
Call 811 before you dig

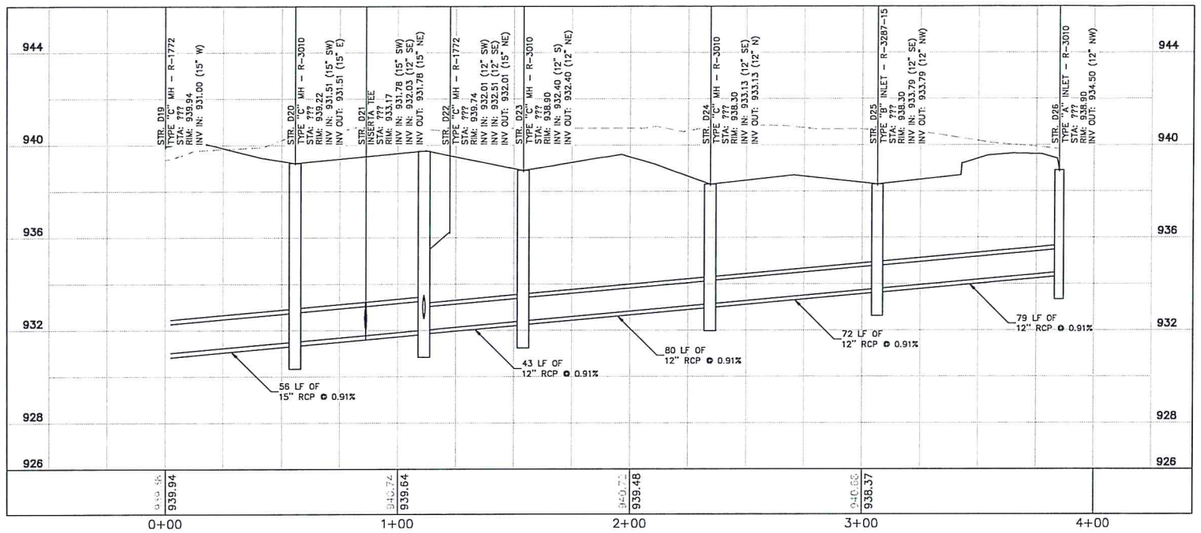

STORM LINE 5
H: 1"=30 | V: 1"=3

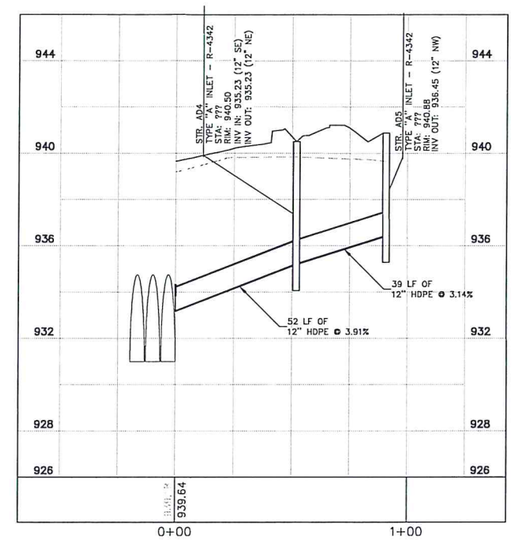

STORM LINE 6
H: 1"=30 | V: 1"=3

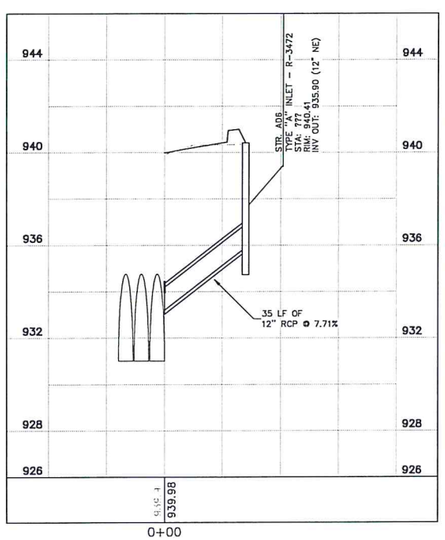

STORM LINE 7
H: 1"=30 | V: 1"=3

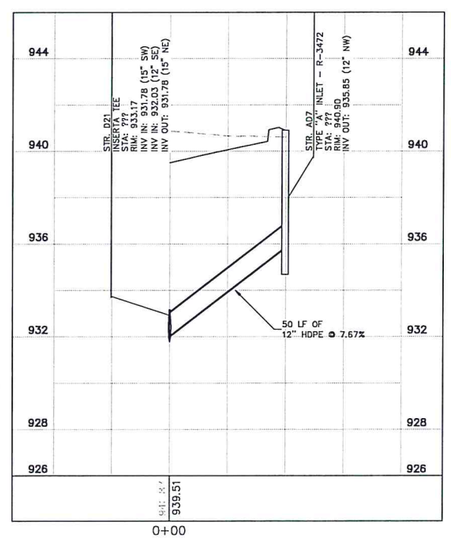

STORM LINE 8
H: 1"=30 | V: 1"=3

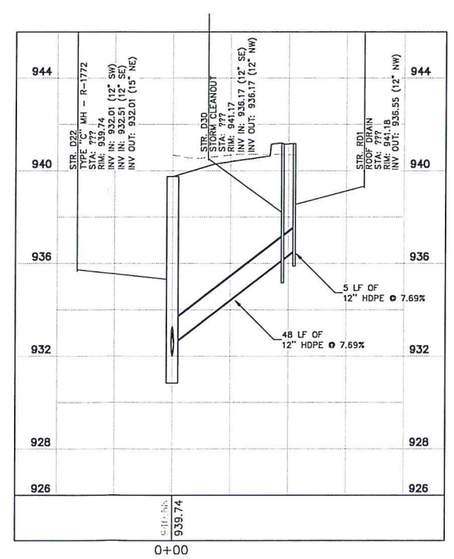

STORM LINE 9
H: 1"=30 | V: 1"=3

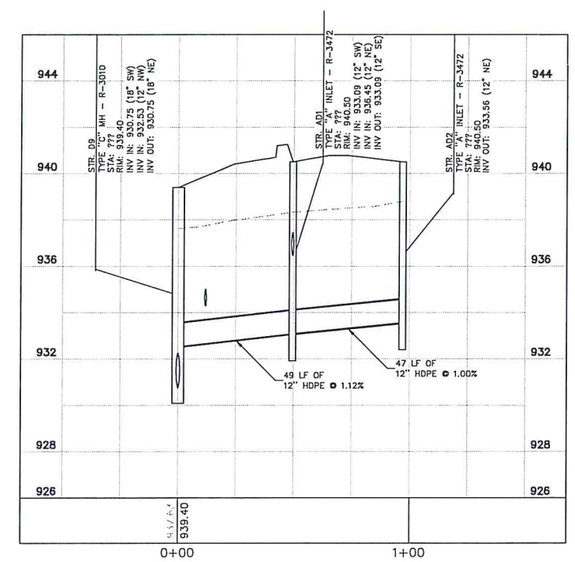

STORM LINE 10
H: 1"=30 | V: 1"=3

PROFILE LEGEND

- FULL DEPTH GRANULAR BACKFILL REQUIRED (PROFILE VIEW)
- EXISTING PROFILE GRADE
- PROPOSED PROFILE GRADE

No.	REVISIONS	DATE	BY

Kimley»Horn
© 2024 KIMLEY-HORN AND ASSOCIATES, INC.
500 EAST 96TH STREET, SUITE 300,
INDIANAPOLIS, IN 46240
PHONE: 317-218-9560
WWW.KIMLEY-HORN.COM

SCALE: AS NOTED
DESIGNED BY: CSM
DRAWN BY: GWE
CHECKED BY: CSM

CHAD STEVEN MEYER REGISTERED PROFESSIONAL ENGINEER PE 10800032 STATE OF INDIANA
NOT APPROVED FOR CONSTRUCTION
PRELIMINARY

MIRA DEVELOPMENT

UTILITY PROFILES

HOME2 SUITES
MUNCIE HOTEL
NWC BETHEL AVE & N MARLEON DR
MUNCIE, IN 47304

ORIGINAL ISSUE: 08/04/2023
KHA PROJECT NO. 170313001
SHEET NUMBER
C6.3

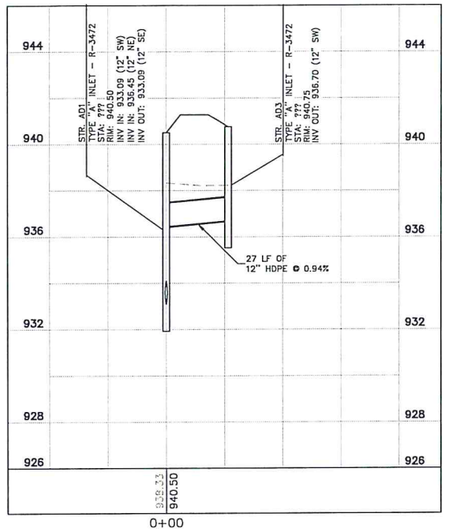

STORM LINE 11
H: 1"=30 | V: 1"=3

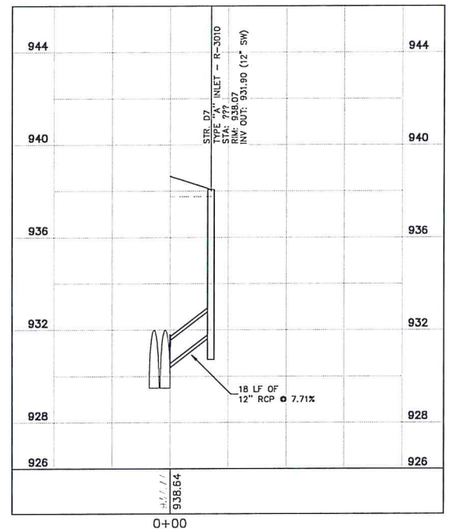

STORM LINE 12
H: 1"=30 | V: 1"=3

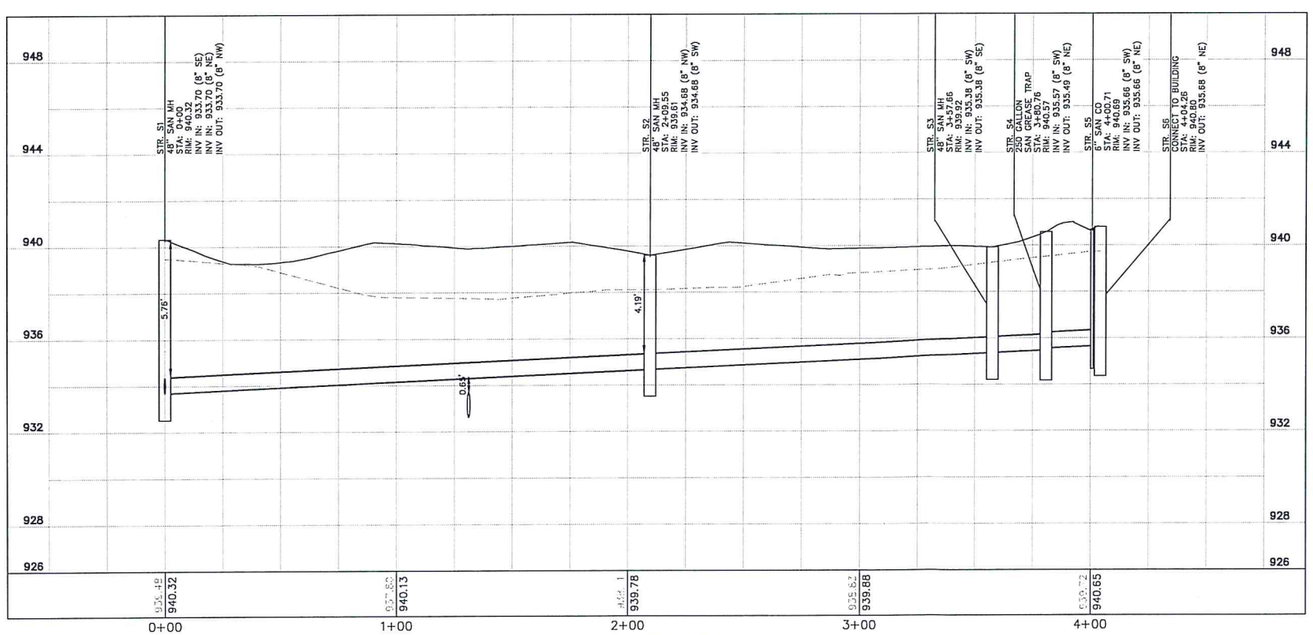

SANITARY LINE 1
H: 1"=30 | V: 1"=3

PROFILE LEGEND

- FULL DEPTH GRANULAR BACKFILL REQUIRED (PROFILE VIEW)
- EXISTING PROFILE GRADE
- PROPOSED PROFILE GRADE

Indiana Utilities Protection Service
Call 811
before you dig

No.	REVISIONS	DATE	BY

Kimley»Horn
©2024 KIMLEY-HORN AND ASSOCIATES, INC.
9202 EAST 96TH STREET, SUITE 300,
INDIANAPOLIS, IN 46240
PHONE: 317-218-9560
WWW.KIMLEY-HORN.COM

SCALE: AS NOTED
DESIGNED BY: CSM
DRAWN BY: GWE
CHECKED BY: CSM

CHAD STEVEN MAYER REGISTERED INDIANA PROFESSIONAL ENGINEER
NOT APPROVED FOR CONSTRUCTION
4/1/24

MIRA DEVELOPMENT

UTILITY PROFILES

HOME2 SUITES
MUNCIE HOTEL
NWC BETHEL AVE & N MARLEON DR
MUNCIE, IN 47304

ORIGINAL ISSUE: 08/04/2023
KHA PROJECT NO. 170313001
SHEET NUMBER
C6.4

wing name: K:\IND_LDEV\170313001_MirdDevelopment_MuncieHotel_Muncie_IN\2 Design\CADD\PlanSheets\C6.1-UTILITY PROFILES.dwg C6.4 Apr 01, 2024 7:07pm by: ChadMayer
is document, together with the concepts and designs presented herein, as an instrument of service, is intended only for the specific purpose and client for which it was prepared. Reuse of and improper reliance on this document without written authorization and adaptation by Kimley-Horn and Associates, Inc. shall be without liability to Kimley-Horn and Associates, Inc.

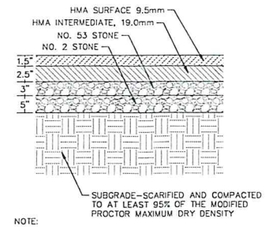

NOTE:

1. CURRENT INDOT SPECIFICATIONS. CONTRACTOR TO ENSURE COMPLIANCE WITH GEOTECHNICAL ENGINEERING RECOMMENDATIONS

HEAVY DUTY ASPHALT PAVEMENT SECTION

N.T.S.

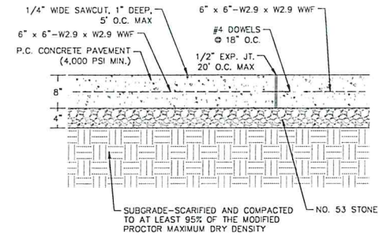

NOTE:

1. CURRENT INDOT SPECIFICATIONS. CONTRACTOR TO ENSURE COMPLIANCE WITH GEOTECHNICAL ENGINEERING RECOMMENDATIONS

HEAVY DUTY CONCRETE PAVEMENT SECTION

N.T.S.

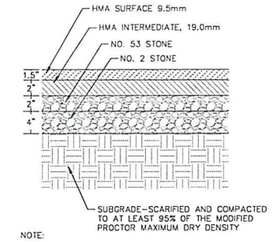

NOTE:

1. CURRENT INDOT SPECIFICATIONS. CONTRACTOR TO ENSURE COMPLIANCE WITH GEOTECHNICAL ENGINEERING RECOMMENDATIONS

STANDARD DUTY ASPHALT PAVEMENT SECTION

N.T.S.

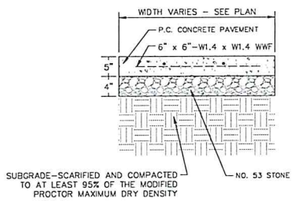

NOTES:

1. ALL SIDEWALK SHALL BE CONSTRUCTED WITH CONCRETE WITH A MINIMUM COMPRESSIVE STRENGTH OF 4,500 PSI AT 14 DAYS.
2. PROVIDE 1/2" EXPANSION JOINTS AT 20', MAXIMUM, SPACING AND FILLED WITH PREMOLDED BITUMINOUS EXPANSION JOINT FILLER MATERIAL OR REDWOOD. EXPANSION JOINTS SHALL HAVE #4 DOWELS, LUBRICATED, 18" LONG, AT 12" CENTERS, 6" FROM EDGE.
3. PROVIDE 3/8" GROOVED CONTROL JOINTS AT 5' CENTERS.
4. PROVIDE 1/2" BITUMINOUS EXPANSION JOINT FILLER MATERIAL WHERE WALK ABUTS EXISTING IMPROVEMENTS AND AT ALL CHANGES IN GRADE
5. USE 2-#4 REINFORCING BARS, 10' LONG OVER ALL UTILITY TRENCHES FOR NEW SIDEWALK AND CONNECTIONS TO EXISTING SIDEWALK.
6. AT DRIVE APPROACHES, SIDEWALK PCC AND BASE THICKNESS SHALL MATCH THAT OF THE DRIVE.

CONCRETE SIDEWALK

N.T.S.

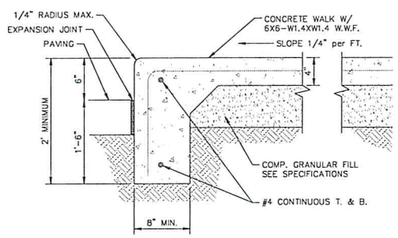

COMBINED CURB AND WALK DETAIL

N.T.S.

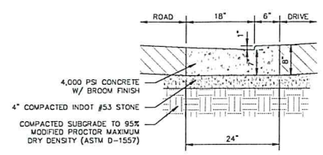

DEPRESSED CONCRETE CURB & GUTTER

N.T.S.

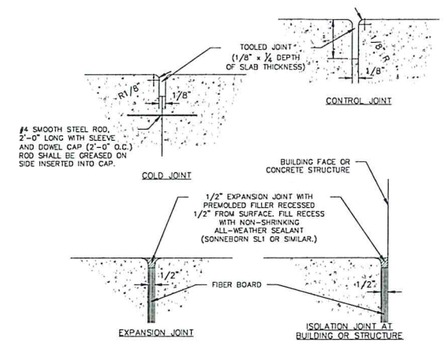

TYPICAL CONCRETE JOINT DETAILS

N.T.S.

SIGNAGE

- WHITE SYMBOL ON BLUE BACKGOUND
- LEGEND & BORDER: GREEN
- BACKGROUND: WHITE
- "VAN ACCESSIBLE" TO BE PROVIDED WHERE PARKING SPACE AND ADJACENT ACCESS AISLE IS 16' MINIMUM TOTAL WIDTH

NOTES:

1. ALL LETTERS ARE 1" AERIES "C" PER MUTCD.
2. SIGN SHALL HAVE A REFLECTORIZED (ENGINEERING GRADE) WHITE BACKGROUND WITH GREEN REFLECTORIZED LEGEND AND BORDER.
3. FINE NOTIFICATION SIGN SHALL HAVE A REFLECTORIZED (ENGINEERING GRADE) WITH GREEN LEGEND AND BORDER.
4. CONTRACTOR SHALL VERIFY FINE AMOUNT.
5. ONE(1) SIGN REQUIRED FOR EACH PARKING SPACE.
6. INSTALLED HEIGHT OF SIGN SHALL BE IN ACCORDANCE WITH SECTION 24-23 OF THE MANUAL ON UNIFORM TRAFFIC CONTROL DEVICES (MUTCD).
7. ALL ACCESSIBLE FEATURES TO BE IN STRICT ACCORDANCE WITH A.D.A STANDARDS AND LOCAL LAWS.

ACCESSIBLE PARKING SIGNAGE

N.T.S.

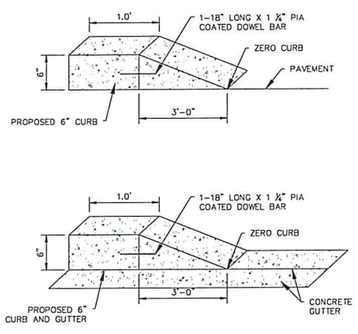

3FT TRANSITION CURB

N.T.S.

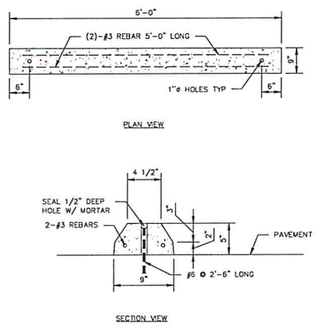

CONCRETE PARKING BUMPER

N.T.S.

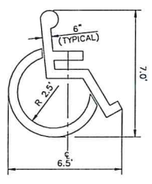

ACCESSIBLE PARKING SYMBOL

N.T.S.

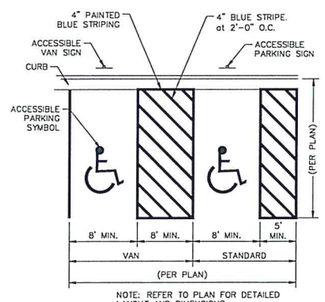

NOTE: REFER TO PLAN FOR DETAILED LAYOUT AND DIMENSIONS

ACCESSIBLE PAVEMENT MARKINGS

N.T.S.

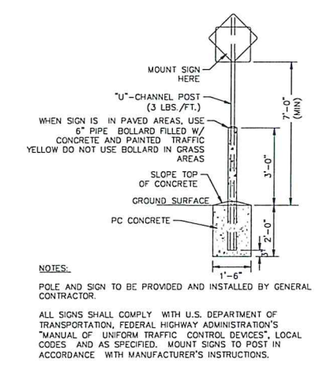

NOTES:

POLE AND SIGN TO BE PROVIDED AND INSTALLED BY GENERAL CONTRACTOR.

ALL SIGNS SHALL COMPLY WITH U.S. DEPARTMENT OF TRANSPORTATION, FEDERAL HIGHWAY ADMINISTRATION'S "MANUAL OF UNIFORM TRAFFIC CONTROL DEVICES", LOCAL CODES AND AS SPECIFIED. MOUNT SIGNS TO POST IN ACCORDANCE WITH MANUFACTURER'S INSTRUCTIONS.

STANDARD SIGN BASE

N.T.S.

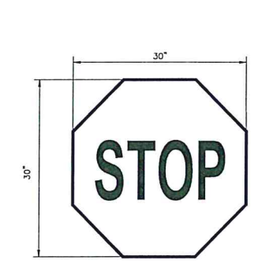

30" X 30" R1-1

STOP SIGN

N.T.S.

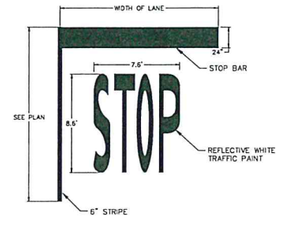

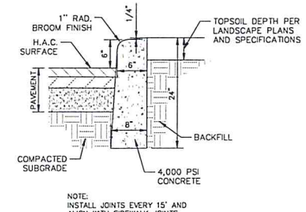

NOTE:
INSTALL JOINTS EVERY 15' AND ALIGN WITH SIDEWALK JOINTS WHERE ADJACENT TO SIDEWALK.

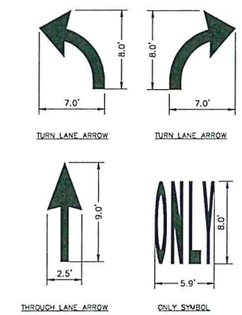

NOTE: ALL TRAFFIC FLOW ARROWS TO BE PAINTED PER STATE DOT STANDARDS PER DIMENSIONS ABOVE.

STANDARD SIGN BASE

N.T.S.

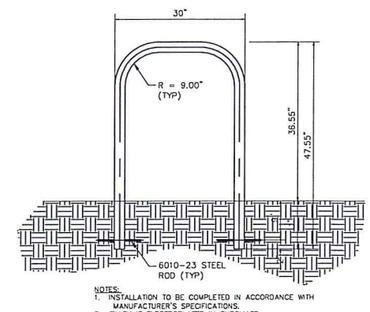

NOTES:
1. INSTALLATION TO BE COMPLETED IN ACCORDANCE WITH MANUFACTURER'S SPECIFICATIONS.
2. FINISH IS ELECTROPLATED IN CHROMATE
3. COLOR TO BE STANDARD BLACK

STOP SIGN

N.T.S.

No.	REVISIONS	DATE	BY

Kimley»Horn
©2024 KIMLEY-HORN AND ASSOCIATES, INC.
9465 KENWOOD ROAD, SUITE 300,
INDIANAPOLIS, IN 46240
PHONE: 317-218-9560
WWW.KIMLEY-HORN.COM

SCALE: AS NOTED
DESIGNED BY: CSM
DRAWN BY: CWE
CHECKED BY: CSM

CHAD STEVEN MOYER REGISTERED PE 10800027 INDIANA PROFESSIONAL ENGINEER
NOT APPROVED FOR CONSTRUCTION

MIRA DEVELOPMENT

CONSTRUCTION DETAILS

HOME2 SUITES MUNCIE HOTEL
NWC BETHEL AVE & N MARLEON DR
MUNCIE, IN 47304

ORIGINAL ISSUE: 08/04/2023
KHA PROJECT NO. 170313001
SHEET NUMBER
C7.0

Drawing name: K:\IND_LDEV\170313001_JiMcDevelopment_Muncie\Muncie_IN\2 Design\CADD\PlanSheets\C7.0-CONSTRUCTION DETAILS.dwg C7.0 Apr 01, 2024 7:08pm by: ChadMoyer
This document, together with the concepts and designs presented herein, as an instrument of service, is intended only for the specific purpose and client for which it was prepared. Reuse of and improper reliance on this document without written authorization and adaptation by Kimley-Horn and Associates, Inc. shall be without liability to Kimley-Horn and Associates, Inc.

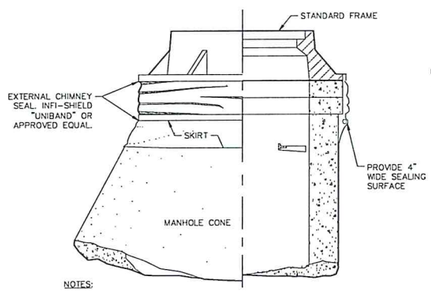

NOTES:

1. CHIMNEY SEALS SHALL BE INSTALLED ON ALL SANITARY SEWERAGE SYSTEM MANHOLES AND GREASE TRAP CATCH BASIN.
2. EXTERNAL CHIMNEY SEAL SHALL BE INFI-SHIELD "UNIBAND" BY SIMA ENVIRONMENTAL OR APPROVED EQUAL.
3. CHIMNEY SEALS SHALL BE INSTALLED IN ACCORDANCE WITH THE MANUFACTURER'S INSTRUCTIONS.

EXTERNAL CHIMNEY SEAL

N.T.S.

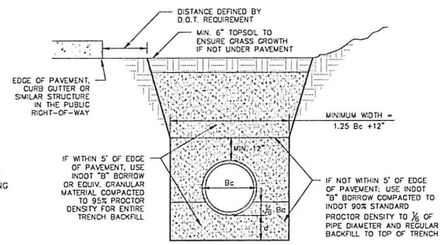

LEGEND
Bc= OUTSIDE DIAMETER
D= INSIDE DIAMETER
d= DEPTH OF BEDDING MATERIAL BELOW PIPE

NOTE:
ALL INITIAL BACKFILL SHALL BE INSTALLED IN 6" TO 12" BALANCED LIFTS.

A MINIMUM 9" OF CLEARANCE SHALL BE PROVIDED ON EACH SIDE OF THE INSTALLED PIPE.

D	d (MIN)
27" & SMALLER	3"
30" TO 60"	4"
66" & LARGER	6"

DEPTH OF BEDDING MATERIAL BELOW PIPE

REINFORCED CONCRETE PIPE (RCP) BEDDING DETAIL

N.T.S.

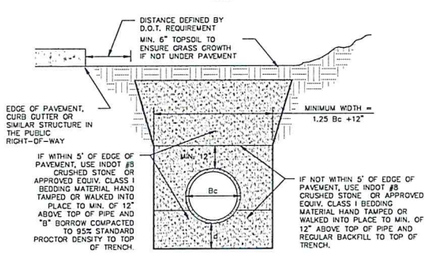

LEGEND
Bc= OUTSIDE DIAMETER
D= INSIDE DIAMETER
d= DEPTH OF BEDDING MATERIAL BELOW PIPE

NOTE:
ALL INITIAL BACKFILL SHALL BE INSTALLED IN 6" TO 12" BALANCED LIFTS.

A MINIMUM 9" OF CLEARANCE SHALL BE PROVIDED ON EACH SIDE OF THE INSTALLED PIPE.

D	d (MIN)
27" & SMALLER	4"
30" TO 60"	4"
66" & LARGER	4"

DEPTH OF BEDDING MATERIAL BELOW PIPE

PLASTIC PIPE (PVC & HDPE) BEDDING DETAIL

N.T.S.

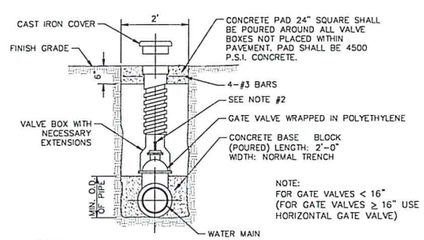

NOTE:
FOR GATE VALVES < 16"
(FOR GATE VALVES ≥ 16" USE HORIZONTAL GATE VALVE)

NOTES:

1. 4"-12" R.S. GATE VALVES SHALL BE IN ACCORDANCE WITH AWWA STANDARD C-509.
2. A PERMANENTLY ATTACHED VALVE EXTENSION STEM SHALL BE REQUIRED IF THE OPERATING NUT FOR ANY VALVE IS LOCATED IN EXCESS OF 4' BELOW THE TOP OF THE VALVE BOX. THIS EXTENSION SHALL BE SUFFICIENT LENGTH TO ENSURE THAT THE TOP IS WITHIN 4' OF THE VALVE BOX LID.
3. DUCTILE IRON OR C-900 PVC PIPE SHALL BE USED FOR VALVE STACKS WITH VALVE BOX CASTING.
4. PLACE A BLUE DOT (3") ON NEAREST CURB FACE TO VALVE.

TYPICAL VALVE SETTING AND BOX

N.T.S.

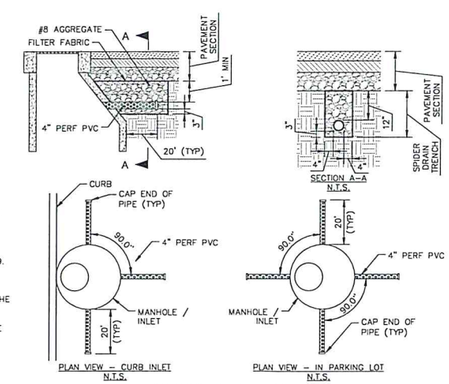

SPIDER DRAIN DETAIL

N.T.S.

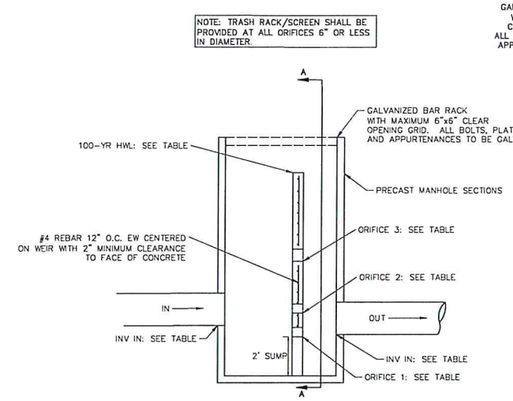

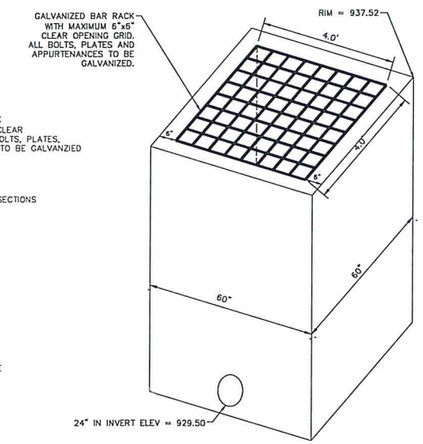

*REFER TO PLANS FOR MORE INFORMATION ON ALL INFLUENT AND EFFLUENT PIPES

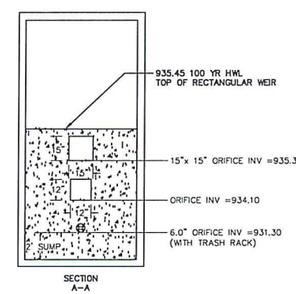

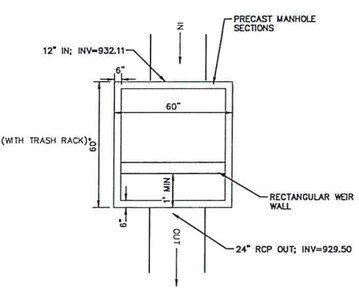

OUTLET CONTROL STRUCTURE

STRUCTURE	RIM	DRY DETETION POND UNDERDRAIN IN	12" IN	ORIFICE 1	ORIFICE 2	ORIFICE 3	24" OUT	100-YR HWL
D2	PER PLAN	932.00	932.11	6.0" Ø @ 931.30	12"x12" @ 934.10	15"x15" @ 935.30	929.50	935.45

No.	REVISIONS	DATE	BY

Kimley»Horn
©2024 KIMLEY-HORN AND ASSOCIATES, INC.
500 EAST 96TH STREET, SUITE 300,
INDIANAPOLIS, IN 46240
PHONE: 317-218-9560
WWW.KIMLEY-HORN.COM

SCALE: AS NOTED
DESIGNED BY: CSM
DRAWN BY: CWE
CHECKED BY: CSM

CHAD STEVEN MYERS REGISTERED PE 19800027 INDIANA PROFESSIONAL ENGINEER
NOT APPROVED FOR CONSTRUCTION

MIRA DEVELOPMENT

CONSTRUCTION DETAILS

HOME2 SUITES MUNCIE HOTEL
NWC BETHEL AVE & N MARLEON DR
MUNCIE, IN 47304

ORIGINAL ISSUE: 08/04/2023
KHA PROJECT NO. 170313001
SHEET NUMBER
C7.1

Drawing name: K:\IND_LDEV\170313001_MiraDevelopment_Muncie\Hotel_Muncie_IN\2 Design\CADD\PlanSheets\C7.0-CONSTRUCTION DETAILS.dwg C7.1 Apr 01, 2024 7:08pm by: ChadMyers
This document, together with the concepts and designs presented herein, as an instrument of service, is intended only for the specific purpose and client for which it was prepared. Reuse of and improper reliance on this document without written authorization and adaptation by Kimley-Horn and Associates, Inc. shall be without liability to Kimley-Horn and Associates, Inc.

Drawing name: K:\IND_LIBEX\170313001_MiraDevelopment_MuncieHotel_MuncieIN\2 Design\CADD\Plansheets\C7.0-CONSTRUCTION DETAILS.dwg C7.2 Apr 01, 2024 7:08pm by: ChadAbyee
This document, together with the concepts and designs presented herein, as an instrument of service, is intended only for the specific purpose and client for which it was prepared. Reuse of and improper reliance on this document without written authorization and adaptation by Kimley-Horn and Associates, Inc. shall be without liability to Kimley-Horn and Associates, Inc.

No.	REVISIONS	DATE	BY

Kimley»Horn
© 2024 KIMLEY-HORN AND ASSOCIATES, INC.
500 EAST 96TH STREET, SUITE 300,
INDIANAPOLIS, IN 46240
PHONE: 317-218-9560
WWW.KIMLEY-HORN.COM

SCALE: AS NOTED
DESIGNED BY: CSM
DRAWN BY: GWE
CHECKED BY: CSM

CHAD STEVEN ABYEE REGISTERED PROFESSIONAL ENGINEER INDIANA
NOT APPROVED FOR CONSTRUCTION

MIRA DEVELOPMENT

CONSTRUCTION DETAILS

HOME2 SUITES
MUNCIE HOTEL
NWC BETHEL AVE & N MARLEON DR
MUNCIE, IN 47304

ORIGINAL ISSUE: 08/04/2023
KHA PROJECT NO. 170313001
SHEET NUMBER
C7.2

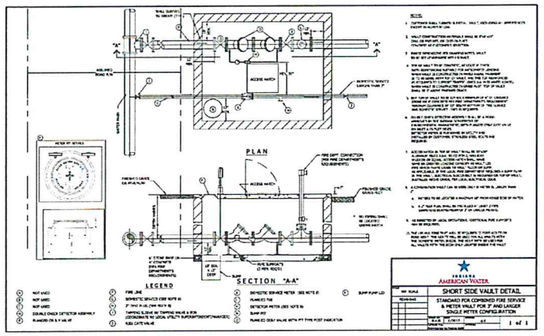

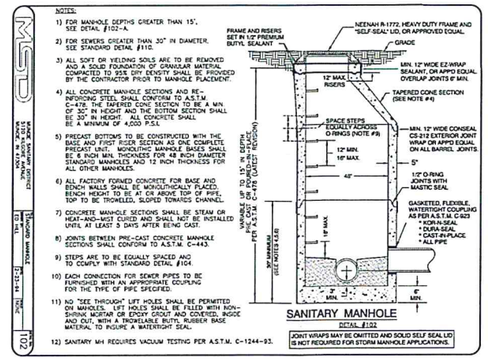

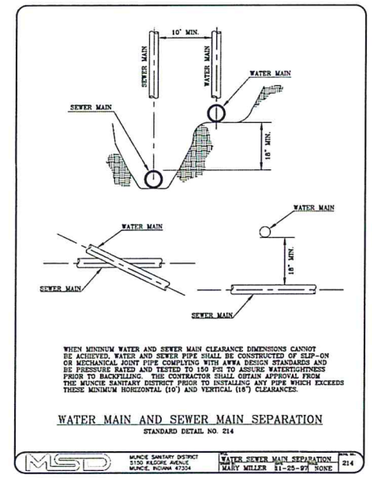

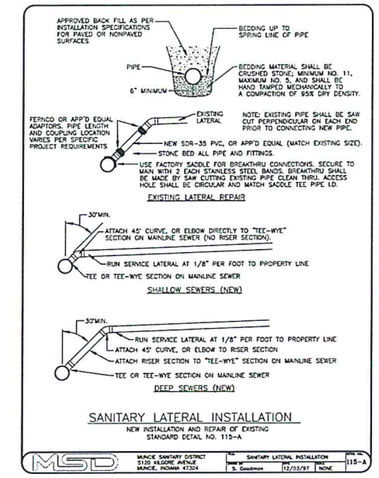

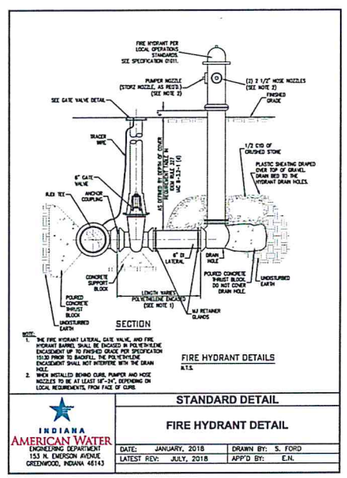

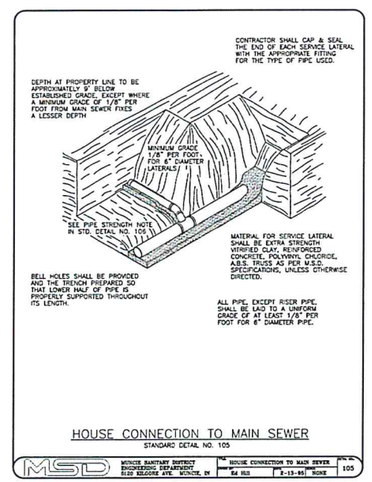

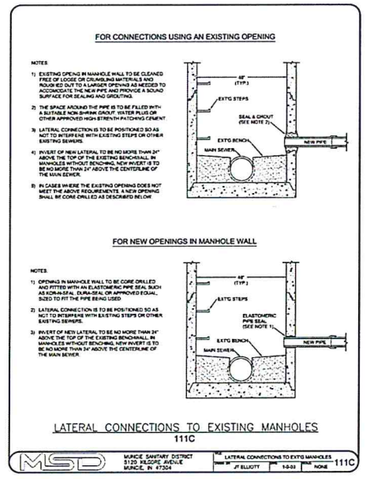

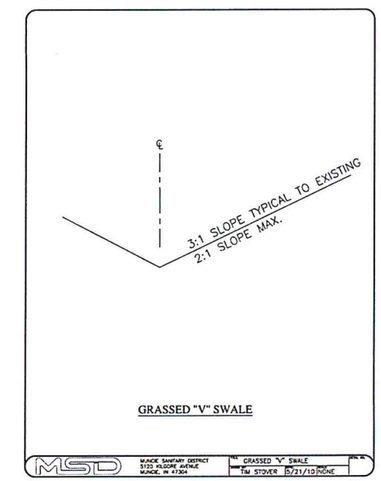

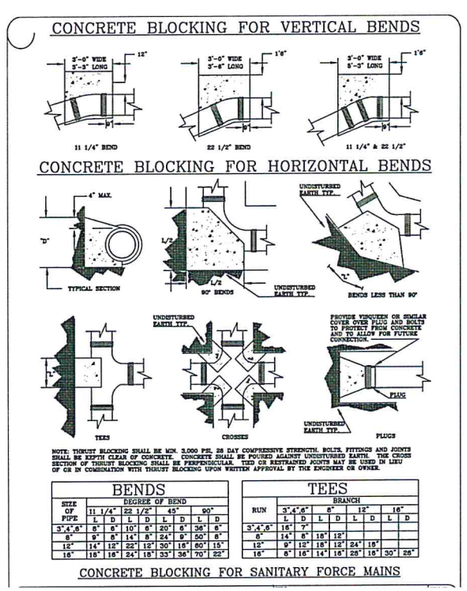

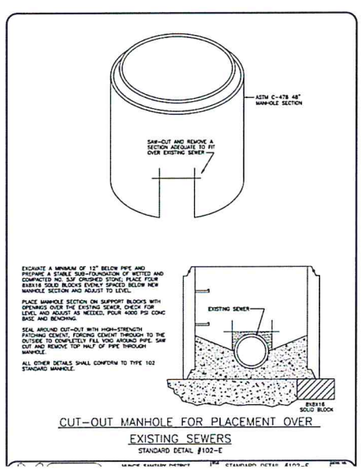

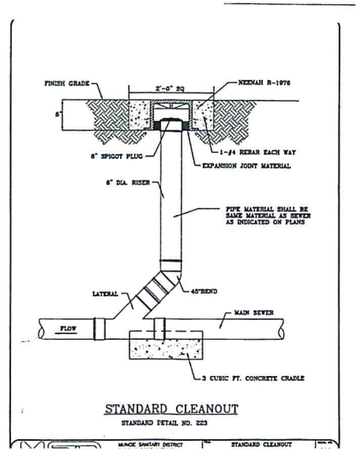

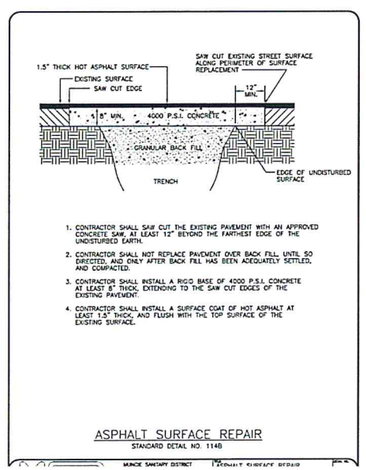

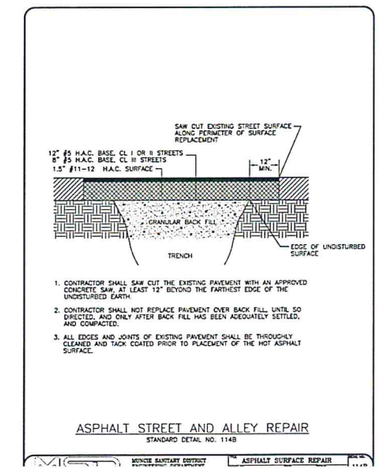

No.	REVISIONS	DATE	BY

SCALE: AS NOTED
DESIGNED BY: CSM
DRAWN BY: GWE
CHECKED BY: CSM

Kimley»Horn
©2024 KIMLEY-HORN AND ASSOCIATES, INC.
9465 EAST 116TH STREET, SUITE 200,
INDIANAPOLIS, IN 46240
PHONE: 317-218-9560
WWW.KIMLEY-HORN.COM

CHAD STEVEN MOYER REGISTERED PROFESSIONAL ENGINEER INDIANA
NOT APPROVED FOR CONSTRUCTION

MIRA DEVELOPMENT

CONSTRUCTION DETAILS

HOME2 SUITES MUNCIE HOTEL
NWC BETHEL AVE & N MARLEON DR
MUNCIE, IN 47304

ORIGINAL ISSUE: 08/04/2023
KHA PROJECT NO. 170313001
SHEET NUMBER
C7.3

Drawing name: K:\IND_LDEV\170313001_Mira\Development_Muncie\Hotel_Muncie_N\2 Design\CADD\PlanSheets\C7.0-CONSTRUCTION DETAILS.dwg C7.3 Apr 01, 2024 7:08pm by: ChadMoyer
This document, together with the concepts and designs presented herein, as an instrument of service, is intended only for the specific purpose and client for which it was prepared. Reuse of and improper reliance on this document without written authorization and adaptation by Kimley-Horn and Associates, Inc. shall be without liability to Kimley-Horn and Associates, Inc.

Catalog #: MRS-LED-24L-SIL-FT-Volt-DIM-30-70CRI-Finish
Prepared By: CBMC, Inc

Project: Mira (Muncie Hotel) - Home 2 Suites
Date: 6-30-23

Mirada Small Area (MRS)

Outdoor LED Area Light

IP66 IK08

OVERVIEW	
Lumen Package	6,000 - 24,000
Wattage Range	39-186
Efficacy Range (LPW)	112-158
Fixture Weight lbs (kg)	20 (9.1)

QUICK LINKS

Ordering Guide Performance Photometrics Dimensions

FEATURES & SPECIFICATIONS

Construction
- Rugged die-cast aluminum housing contains factory prewired driver and optical unit. Cast aluminum wiring access door located underneath.
- Fixtures are finished with LSI's DuraGrip® polyester powder coat finishing process. The DuraGrip finish withstands extreme weather changes without cracking or peeling. Other standard LSI finishes available. Consult factory.
- Shipping weight: 27 lbs in carton.

Optical System
- State-of-the-Art one piece silicone optic sheet delivers industry leading optical control with an integrated gasket to provide IP66 rated seal.
- Proprietary silicone refractor optics provide exceptional coverage and uniformity in distribution types 2, 3, 5W, and FT.
- Silicone optical material does not yellow or crack with age and provides a typical light transmittance of 93%.
- Zero uplight.
- Available in 5000K, 4000K, and 3000K color temperatures per ANSI C78.377
- Minimum CRI of 70.
- Integral louver (IL) and integral half louver (IH) options available for enhanced backlight control.

Electrical
- High-performance driver features over-voltage, under-voltage, short-circuit and over temperature protection.
- 0-10V dimming (10% - 100%) standard.
- Standard Universal Voltage (120-277 VAC) Input 50/60 Hz or optional High Voltage (347-480 VAC).
- L70 Calculated Life: >60k Hours
- Total harmonic distortion: <20%
- Operating temperature: -40°C to +50°C (-40°F to +122°F).
- Power factor: >.90
- Input power stays constant over life.
- Field replaceable 10kV surge protection device meets a minimum Category C Low operation (per ANSI/IEEE C62.41.2).
- High-efficacy LEDs mounted to metal-core circuit board to maximize heat dissipation
- Driver is fully encased in potting material for moisture resistance and complies with FCC standards. Driver and key electronic components can easily be accessed.

Controls
- Optional integral passive infrared Bluetooth™ motion and photocell sensor. Fixtures operate independently and can be commissioned via iOS or Android configuration app.
- LSI's AirLink™ wireless control system options reduce energy and maintenance costs while optimizing light quality 24/7.

Installation
- Designed to mount to square or round poles.
- A single fastener secures the hinged door, underneath the housing and provides quick & easy access to the electrical compartment.
- Included terminal block accepts up to 12 ga. wire.
- Utilizes LSI's traditional B3 drill pattern.

Warranty
- LSI luminaires carry a 5-year limited warranty. Refer to https://www.lsicorp.com/resources/terms-conditions-warranty/ for more information.

Listings
- Listed to UL 1598 and UL 8750.
- Meets Buy American Act requirements.
- IDA compliant; with 3000K color temperature selection.
- Title 24 Compliant; see local ordinance for qualification information.
- Suitable for wet locations.
- IP66 rated Luminaire per IEC 60598-1.
- 3G rated for ANSI C136.31 high vibration applications are qualified.
- DesignLights Consortium® (DLC) qualified product. Not all versions of this product may be DLC qualified. Please check the DLC Qualified Products List at www.designlights.org/QPL to confirm which versions are qualified.

Mirada Small Area Light (MRS)

Have questions? Call us at (800) 436-7800

Type: X-S4

ORDERING GUIDE

Back to Quick Links

TYPICAL ORDER EXAMPLE: MRS LED 18L SIL FT UNV DIM 40 70CRI ALDC3 BLK IH

Prefix	Light Source	Lumen Package	Lens	Distribution	Orientation[2]	Voltage	Driver
MRS - Mirada Small Area Light	LED	6L - 6,000 lms 9L - 9,000 lms 12L - 12,000 lms 15L - 15,000 lms 18L - 18,000 lms 21L - 21,000 lms 24L - 24,000 lms Custom Lumen Package[1]	SIL - Silicone	2 - Type 2 3 - Type 3 5W - Type 5 Wide FT - Forward Throw	(Blank) - standard L - Option installed left 90° R - Option installed right 90°	UNV - Universal Voltage (120-277V) HVI - High Voltage (347-480V)	DIM - 0-10V Dimming (10-100)

Color Temp	Color Rendering	Controls (Choose One)	Finish	Options
5K - 5,000 CCT 4K - 4,000 CCT 3K - 3,000 CCT	70CRI - 70 CRI	(Blank) - None Wireless Controls Options ALSC - AirLink Surface Control System ALSCS2 - AirLink Surface Control System with 12-27' PM Motion Sensor ALSCS4 - AirLink Surface Control System with 35-42' PM Motion Sensor ALMCS3 - AirLink Blue Wireless Motion & Photo Sensor Controller (9-14' PM) ALMCS2 - AirLink Blue Wireless Motion & Photo Sensor Controller (25-42' PM) Hand-Alone Controls ELI - 0-10V Dimming leads extended to housing exterior CRTP - 7-Pin Control Receptacle NEQ (3.5K,4)[3] IMSBT1 - Integral Bluetooth® Motion and Photocell Sensor (8-24' PM)[4] IMSBT2 - Integral Bluetooth® Motion and Photocell Sensor (25-42' PM)[4]	BLK - Black BRZ - Dark Bronze GMS - Gun Metal Gray GPT - Graphite MSP - Metallic Silver PVD - Platinum Plus SMG - Safari Mistie Green WHT - White	(Blank) - None IH - Integral Half Louver (Moderate Spill Light Control)[5] IL - Integral Louver (Sharp Spill Light Control)[5]

Need more information? Click here for our glossary

Have additional questions? Call us at (800) 436-7800

Accessory Ordering Information[6]

CONTROLS ACCESSORIES Description	Order Number
Twist Lock Photocell (120V) for use with CRTP	122598
Twist Lock Photocell (208-277) for use with CRTP	122596
Twist Lock Photocell (347V) for use with CRTP	122596
Twist Lock Photocell (480V) for use with CRTP	122598
AirLink 5 Pin Twist Lock Controller	601409
AirLink 7 Pin Twist Lock Controller	601410
Shorting Cap for use with CRTP	141528

FUSING OPTIONS[7] Description	Order Number
Single Fusing (120V)	See Fusing Accessory Guide
Single Fusing (277V)	
Double Fusing (208, 240V)	
Double Fusing (480V)	
Double Fusing (347V)	

SHIELDING OPTIONS Description	Order Number
Mirada Small	See Shielding Guide
Mirada Medium	
Mirada Large	
Zone Medium	
Zone Large	
Size Medium	

1. Custom lumen and color packages available, consult factory. Values are within industry standard tolerances, but not SDCM 3.
2. Not available on "Type 5W" distribution.
3. Control groups or devices are not included unless specified. See Accessory Ordering Information.
4. IMSBT is field configurable via the LSI app that can be downloaded from your smartphone's Android or app store.
5. Accessories are shipped separately and field installed.
6. "CLP" denotes finish. See finish options.
7. Fusing must be located in luminaire or pole. See Fusing Accessory Guide for compatibility.

Mirada Small Area Light (MRS)

Have questions? Call us at (800) 436-7800

Type:

ACCESSORIES

Back to Quick Links

MOUNTING ACCESSORIES

Side Arm

Universal Mounting Bracket
Mounts to a 4" square or round (square/round) poles with (2) mounting hole spaces between 12" to 5".
Part Number: BRA UMB C3

Quick Mount Plate
This one piece installation to existing knockout connections poles with hole spacers between 2 & 4.5".
Part Number: BRS PQM B3B1 S2 C3

12" BB Quick Mount Plate
This one piece installation to existing knockout connections poles with hole spacers between 2 & 4.5".
Part Number: BRS PQM1 B3B1 S2 C3

Tenon / Slip Fitter

Adjustable Shielder
Mounts onto a 2" (Omega) to 2.375" (Adams) O.D. tenon and provides 180° of tilt 2 has 45° above horizontal.
Part Number: BRA ASF C3B

Square Tenon Top
Mounts onto a 2" (Omega) to 2.375" (Adams) O.D. tenon and allows for mounting up to 4 luminaires.
Part Number: BRA STM *

Square Internal Shielder
Mounts inside 4" x 5" square pole and allows for mounting up to 4 luminaires.
Part Number: BRA S_ISF * C3

Wall Mount / Wood Pole

Wall Mount Bracket
Mounts to a vertical wall surface (hardware/anchors not included)
Part Number: BRS WBB WH C3B

Wood Pole Bracket
Mount, with wooden poles, 8" minimum DIA. (hardware/anchors not included)
Part Number: BRS WBB WP C3

SHIELDING, POLES & MISC. ACCESSORIES

Shielding

Integral Louver
Field installed integral louver provides maximum backlight control to shielding each individual row of LEDs.
Part Number: RGA45

Integral Half Louver
Field installed integral half louver provides good backlight control without losing broad side distribution.
Part Number: RGA45

External Shield
External pole shields are of light source form anyway. Allows some additional shielding on adjacent sides of pole.
Part Number: RGA4SHB (2") / RGA4SHB (6")

Poles

Square Poles
14 - 70' Steel and Aluminum poles in 4", 5", and 6" sizes for retrofit and new construction
Part Number: 4SS/5SS/6SS

Round Poles
16 - 70' Steel and Aluminum poles in 4" and 5" sizes for retrofit and new construction
Part Number: 4RP/5RP

Squared Poles
20 - 70' Steel and Aluminum poles for retrofit and new construction
Part Number: RSP

Misc.

Bird Spikes
10" Long Bird Spikes. 1 Kit recommended per luminaire, includes silicone adhesive and application tool
Part Number: TBR2B

Replace C3 with current finish designation.
Replace 3 in all blue in square pole or 6" in round pole (ex: C3S)
Replace * with: S (Slim), SSM (Small), RPM (Medium), RPL (Large), RSM (Square)
Replace _ with 4 if shown (4" or 5") square pole.

OPTICS ROTATION

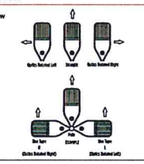

ACCESSORIES/OPTIONS

Integral Louver (IL) and House-Side Shield (IH)
Integral louver (IL) and half louver (IH) accessory shields available for improved backlight control without sacrificing street side performance. LSI's Integral Louver (IL) and Integral House-Side Shield (IH) options deliver backlight control that significantly reduces wall light bleed and the glare for applications with pole locations close to adjacent properties. The design maximizes forward reflected light while reducing glare, maintaining the optical distribution selected, and most importantly eliminating light trespass. Both options include with the optical distribution.

Luminaire Shown with Integral Louver (IL)

Luminaire Shown with IMSBT Option

7 Pin Photoelectric Control
7-pin ANSI C136.41-2013 control receptacle option available for twist lock photocontrols or wireless control modules. Control accessories sold separately. Dimming leads from the receptacle will be connected to the driver dimming leads (Consult factory for alternate wiring).

Luminaire Shown with CRTP

Mirada Small Area Light (MRS)

Have questions? Call us at (800) 436-7800

Type:

PERFORMANCE

Back to Quick Links

DELIVERED LUMENS[1]

Lumen Package	Distribution	CRI	3000K CCT Delivered Lumens	3000K CCT Efficacy	3000K CCT BUG Rating	4000K CCT Delivered Lumens	4000K CCT Efficacy	4000K CCT BUG Rating	5000K CCT Delivered Lumens	5000K CCT Efficacy	5000K CCT BUG Rating	Wattage
6L	2	70	5918	149	B2-U0-G2	6156	155	B2-U0-G2	6122	155	B2-U0-G1	39
	3		6016	152	B1-U0-G2	6258	158	B1-U0-G2	6224	157	B1-U0-G2	
	5W		5660	144	B1-U0-G1	5919	149	B1-U0-G1	5886	149	B1-U0-G1	
	FT		5822	147	B1-U0-G1	6057	152	B1-U0-G1	6023	152	B1-U0-G1	
9L	2	70	9291	145	B2-U0-G2	9404	152	B2-U0-G2	9482	150	B2-U0-G2	63
	3		9240	148	B2-U0-G2	9641	154	B2-U0-G2	9619	154	B2-U0-G2	
	5W		8743	140	B1-U0-G2	9178	146	B1-U0-G2	9097	144	B1-U0-G2	
	FT		8943	142	B2-U0-G2	9350	149	B2-U0-G2	9308	149	B2-U0-G2	
12L	2	70	12132	141	B2-U0-G2	12425	148	B2-U0-G2	12514	146	B2-U0-G2	86
	3		12333	143	B2-U0-G2	12614	150	B2-U0-G2	12721	148	B2-U0-G2	
	5W		11664	136	B1-U0-G2	12195	142	B1-U0-G2	12320	143	B1-U0-G2	
	FT		11935	139	B2-U0-G2	12479	145	B2-U0-G2	12599	145	B2-U0-G2	
15L	2	70	14225	126	B3-U0-G2	15182	137	B3-U0-G2	14488	130	B3-U0-G2	113
	3		14518	135	B2-U0-G2	15155	144	B2-U0-G2	15219	137	B2-U0-G2	
	5W		14204	129	B4-U0-G2	15292	137	B4-U0-G2	14524	130	B4-U0-G2	
	FT		14542	129	B2-U0-G2	15292	138	B2-U0-G2	14602	132	B2-U0-G2	
18L	2	70	16438	122	B3-U0-G3	17222	130	B3-U0-G3	16247	124	B3-U0-G3	135
	3		17267	128	B3-U0-G3	18457	137	B3-U0-G3	17332	131	B3-U0-G3	
	5W		16525	123	B4-U0-G3	17836	133	B5-U0-G3	16846	125	B4-U0-G3	
	FT		16718	125	B3-U0-G3	17632	131	B3-U0-G3	16836	125	B3-U0-G3	
21L	2	70	19438	116	B3-U0-G3	20186	126	B3-U0-G3	19185	120	B3-U0-G3	165
	3		20472	124	B3-U0-G3	21115	132	B3-U0-G3	20157	126	B3-U0-G3	
	5W		19604	119	B5-U0-G3	20,909	126	B5-U0-G3	19917	121	B5-U0-G3	
	FT		19835	119	B3-U0-G3	20564	127	B3-U0-G3	20026	121	B3-U0-G3	
24L	2	70	21976	112	B3-U0-G3	23439	120	B3-U0-G3	22700	114	B3-U0-G3	196
	3		23105	118	B3-U0-G3	24422	125	B3-U0-G3	23519	120	B3-U0-G3	
	5W		22125	113	B5-U0-G3	23578	120	B5-U0-G3	22502	115	B5-U0-G3	
	FT		22364	113	B3-U0-G3	23640	121	B3-U0-G3	22508	115	B3-U0-G3	

*LEDs are frequently updated therefore values are nominal.

ELECTRICAL DATA (AMPS)*

Lumens	120V	208V	240V	277V	347V	480V
6L	0.34	0.20	0.17	0.15	0.12	0.09
9L	0.52	0.30	0.26	0.23	0.18	0.13
12L	0.72	0.41	0.36	0.31	0.25	0.18
15L	0.91	0.53	0.46	0.41	0.32	0.23
18L	1.12	0.65	0.56	0.49	0.39	0.28
21L	1.39	0.80	0.69	0.60	0.48	0.34
24L	1.65	0.94	0.82	0.71	0.56	0.41

*Shaded values at 25°C (77°). Actual results may differ by +/-10%

RECOMMENDED LUMEN MAINTENANCE[2]

Ambient Temp	Lumen Multiplier 0 hrs.[1]	25K hrs.[1]	50K hrs.[1]	75K hrs.[1]	100K hrs.[1]
0 (-25 C	102%	97%	94%	91%	89%
40 C	102%	94%	87%	82%	74%

1. Lumen maintenance values at 25°C are calculated per TM-21 based on LM-80 data and manufacturer factors.
2. In accordance with IESNA TM-21-11, Projected values represent expectations based on test durations that are within six times (6X) the LM-80 test duration (or hours) for the three active outdoor LED packages (3K, 4K, 5K).
3. In accordance with IESNA TM-21-11, Calculated values represent time durations that exceed six times (6X) the LM-80 test duration (or hours) for the three active outdoor LED packages (3K, 4K, 5K).

Mirada Small Area Light (MRS)

Have questions? Call us at (800) 436-7800

Type:

PHOTOMETRICS

Back to Quick Links

Luminaire photometry has been conducted by an accredited laboratory in accordance with IESNA LM-79. As specified by IESNA LM-79 the entire luminaire is tested as the source resulting in a luminaire efficiency of 100%.

MRS-LED-18L-SIL-2-40-70CRI

Luminaire Data	
Type 2 Distribution	
Description	4000 Kelvin, 70 CRI
Delivered Lumens	12,532
Watts	135
Efficacy	93
BUG Type	Type II - Short
BUG Rating	B3-U0-G3

Zonal Lumen Summary Zone	Lumens	% Luminaire
Low (0-30)°	2131	16%
Medium (30-60)°	10710	59%
High (60-80)°	4298	24%
Very High (80-90)°	184	1%
Uplight (90-180)°	0	0%
Total Flux	17532	100%

ISO FOOTCANDLE

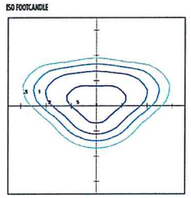

POLAR CURVE

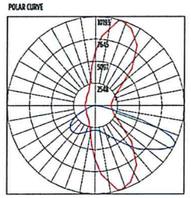

20' Mounting Height/20' Grid Spacing

5 FC 2 FC 1 FC 0.5 FC

MRS-LED-18L-SIL-3-40-70CRI

Luminaire Data	
Type 3 Distribution	
Description	4000 Kelvin, 70 CRI
Delivered Lumens	18,407
Watts	135
Efficacy	137
BUG Type	Type III - Short
BUG Rating	B3-U0-G3

Zonal Lumen Summary Zone	Lumens	% Luminaire
Low (0-30)°	2329	13%
Medium (30-60)°	10634	57%
High (60-80)°	5248	30%
Very High (80-90)°	205	1%
Uplight (90-180)°	0	0%
Total Flux	18417	100%

ISO FOOTCANDLE

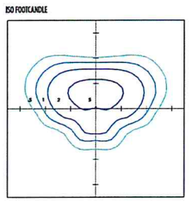

POLAR CURVE

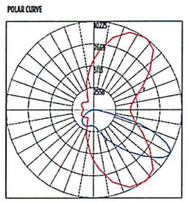

20' Mounting Height/20' Grid Spacing

5 FC 2 FC 1 FC 0.5 FC

Mirada Small Area Light (MRS)

Have questions? Call us at (800) 436-7800

Type:

PHOTOMETRICS (CONT)

Back to Quick Links

MRS-LED-18L-SIL-FT-40-70CRI

Luminaire Data	
Type FT Distribution	
Description	4000 Kelvin, 70 CRI
Delivered Lumens	17,642
Watts	135
Efficacy	131
BUG Type	Type III - Short
BUG Rating	B3-U0-G2

Zonal Lumen Summary Zone	Lumens	% Luminaire
Low (0-30)°	2255	13%
Medium (30-60)°	9453	54%
High (60-80)°	5696	32%
Very High (80-90)°	258	2%
Uplight (90-180)°	0	0%
Total Flux	17642	100%

ISO FOOTCANDLE

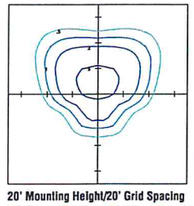

POLAR CURVE

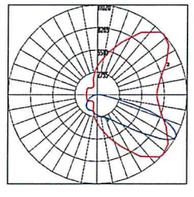

20' Mounting Height/20' Grid Spacing

5 FC 2 FC 1 FC 0.5 FC

MRM-LED-30L-SIL-5W-40-70CRI

Luminaire Data	
Type 5W Distribution	
Description	4000 Kelvin, 70 CRI
Delivered Lumens	17,638
Watts	135
Efficacy	131
BUG Type	Type V5 - Short
BUG Rating	B4-U0-G2

Zonal Lumen Summary Zone	Lumens	% Luminaire
Low (0-30)°	1646	9%
Medium (30-60)°	7613	43%
High (60-80)°	8405	48%
Very High (80-90)°	172	1%
Uplight (90-180)°	0	0%
Total Flux	17636	100%

ISO FOOTCANDLE

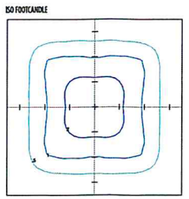

POLAR CURVE

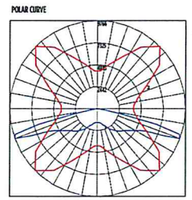

20' Mounting Height/20' Grid Spacing

5 FC 2 FC 1 FC 0.5 FC

Mirada Small Area Light (MRS)

Have questions? Call us at (800) 436-7800

Type:

PRODUCT DIMENSIONS

Back to Quick Links

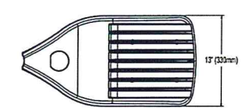

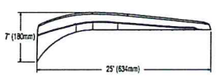

LUMINAIRE EPA CHART - MRS Tilt Degrees		0°	30°	45°	Tilt Degrees		0°	30°	45°
4SQ	Single	0.5	1.3	1.8		TWP	1.4	2.3	2.6
2SQ-180	D180°	0.9	1.3	1.8		TW120°	1.4	1.9	2.3
4SQ	D90°	0.9	1.8	2.2		QW	1.4	2.3	2.6

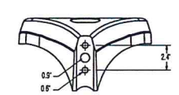

B3 Drill Pattern

CONTROLS

AirLink Wireless Lighting Controller
The AirLink integrated controller is a California Title 24 compliant lighting controller that provides real-time light monitoring and control with utility-grade power monitoring. It includes a 24V sensor input and power supply to connect a sensor into the outdoor AirLink wireless lighting system. The wireless integrated controller is compatible with this fixture.
Click here to learn more about AirLink.

Integral Bluetooth™ Motion and Photocell Sensor (IMSBT)
Slim low profile sensor provides multi-level control based on motion and/or daylight. Sensor controls 0-10 VDC LED drivers and is rated for cold and wet locations (-30° C to 70° C). Two unique PIR lenses are available and used based on fixture mounting height. All control parameters are adjustable via an IOS or Android App capable of storing and transmitting sensor profiles.
Click here to learn more about IMSBT.

AirLink Blue
Wireless Bluetooth Mesh Outdoor Lighting Control System that provides energy savings, code compliance and enhanced safety/security for parking lots and parking garages. Three key components; Bluetooth wireless radio/sensor controller, Time Keeper and an iOS App. Capable of grouping multiple fixtures and sensors as well as scheduling time-based events by zone. Radio/Sensor Controller is factory integrated into Area/Site, Wall Mounted, Parking Garage and Canopy luminaires.
Click here to learn more about AirLink Blue.

No.	REVISIONS	DATE	BY

Kimley»Horn
© 2024 KIMLEY-HORN AND ASSOCIATES, INC.
500 EAST 96TH STREET, SUITE 300
INDIANAPOLIS, IN 46240
PHONE: 317-218-9560
WWW.KIMLEY-HORN.COM

SCALE: AS NOTED
DESIGNED BY: CSW
DRAWN BY: GWE
CHECKED BY: CSW

CHAD STEVEN MOYER
STATE OF INDIANA
PE 21800032
NOT APPROVED FOR CONSTRUCTION
PRELIMINARY
PROFESSIONAL ENGINEER

MIRA DEVELOPMENT

CONSTRUCTION DETAILS

HOME2 SUITES MUNCIE HOTEL
NWC BETHEL AVE & N MARLEON DR
MUNCIE, IN 47304

ORIGINAL ISSUE: 08/04/2023
KHA PROJECT NO. 170313001
SHEET NUMBER
C7.4

Drawing name: K:\IND_LDEV\170313001_MiraDevelopment_Muncie\Civil_Muncie_NV2 Design\CADD\PlanSheets\C7.0-CONSTRUCTION DETAILS.dwg C7.4 Apr 01, 2024 7:08am by: Chad Moyer
This document, together with the concepts and designs presented herein, as an instrument of service, is intended only for the specific purpose and client for which it was prepared. Reuse of and improper reliance on this document without written authorization and adaptation by Kimley-Horn and Associates, Inc. shall be without liability to Kimley-Horn and Associates, Inc.

ADS
Advanced Drainage Systems, Inc.

ADS SiteAssist™
FOR STORMTECH INSTALLATION INSTRUCTIONS VISIT OUR APP.

MC-3500 STORMTECH CHAMBER SPECIFICATIONS

1. CHAMBERS SHALL BE STORMTECH MC-3500.
2. CHAMBERS SHALL BE ARCH-SHAPED AND SHALL BE MANUFACTURED FROM VIRGIN, IMPACT-MODIFIED POLYPROPYLENE COPOLYMERS.
3. CHAMBERS SHALL MEET THE REQUIREMENTS OF ASTM F2418, "STANDARD SPECIFICATION FOR POLYPROPYLENE (PP) CORRUGATED WALL STORMWATER COLLECTION CHAMBERS" CHAMBER CLASSIFICATION 45478 DESIGNATION SS.
4. CHAMBER ROWS SHALL PROVIDE CONTINUOUS, UNOBSTRUCTED INTERNAL SPACE WITH NO INTERNAL SUPPORTS THAT WOULD IMPEDE FLOW OR LIMIT ACCESS FOR INSPECTION.
5. THE STRUCTURAL DESIGN OF THE CHAMBERS, THE STRUCTURAL BACKFILL, AND THE INSTALLATION REQUIREMENTS SHALL ENSURE THAT THE LOAD FACTORS SPECIFIED IN THE AASHTO LRFD BRIDGE DESIGN SPECIFICATIONS, SECTION 12.12, ARE MET FOR: 1) LONG-DURATION DEAD LOADS AND 2) SHORT-DURATION LIVE LOADS, BASED ON THE AASHTO DESIGN TRUCK WITH CONSIDERATION FOR IMPACT AND MULTIPLE VEHICLE PRESENCES.
6. CHAMBERS SHALL BE DESIGNED, TESTED AND ALLOWABLE LOAD CONFIGURATIONS DETERMINED IN ACCORDANCE WITH ASTM F2787, "STANDARD PRACTICE FOR STRUCTURAL DESIGN OF THERMOPLASTIC CORRUGATED WALL STORMWATER COLLECTION CHAMBERS". LOAD CONFIGURATIONS SHALL INCLUDE: 1) INSTANTANEOUS (+1 MPH) AASHTO DESIGN TRUCK LIVE LOAD ON MINIMUM COVER 2) MAXIMUM PERMANENT (75+YR) COVER LOAD AND 3) ALLOWABLE COVER WITH PARKED (1-WEEK) AASHTO DESIGN TRUCK.
7. REQUIREMENTS FOR HANDLING AND INSTALLATION:
   - TO MAINTAIN THE WIDTH OF CHAMBERS DURING SHIPPING AND HANDLING, CHAMBERS SHALL HAVE INTEGRAL, INTERLOCKING STACKING LUGS.
   - TO ENSURE A SECURE JOINT DURING INSTALLATION AND BACKFILL, THE HEIGHT OF THE CHAMBER JOINT SHALL NOT BE LESS THAN 3".
   - TO ENSURE THE INTEGRITY OF THE ARCH SHAPE DURING INSTALLATION, a) THE ARCH STIFFNESS CONSTANT SHALL BE GREATER THAN OR EQUAL TO 450 LBS/FT/%. THE ASC IS DEFINED IN SECTION 6.2.8 OF ASTM F2418. AND b) TO RESIST CHAMBER DEFORMATION DURING INSTALLATION AT ELEVATED TEMPERATURES (ABOVE 73° F / 23° C), CHAMBERS SHALL BE PRODUCED FROM REFLECTIVE GOLD OR YELLOW COLORS.
8. ONLY CHAMBERS THAT ARE APPROVED BY THE SITE DESIGN ENGINEER WILL BE ALLOWED UPON REQUEST BY THE SITE DESIGN ENGINEER OR OWNER, THE CHAMBER MANUFACTURER SHALL SUBMIT A STRUCTURAL EVALUATION FOR APPROVAL BEFORE DELIVERING CHAMBERS TO THE PROJECT SITE AS FOLLOWS:
   - THE STRUCTURAL EVALUATION SHALL BE SEALED BY A REGISTERED PROFESSIONAL ENGINEER.
   - THE STRUCTURAL EVALUATION SHALL DEMONSTRATE THAT THE SAFETY FACTORS ARE GREATER THAN OR EQUAL TO 1.95 FOR DEAD LOAD AND 1.75 FOR LIVE LOAD. THE MINIMUM REQUIRED BY ASTM F2787 AND BY SECTIONS 3 AND 12.12 OF THE AASHTO LRFD BRIDGE DESIGN SPECIFICATIONS FOR THERMOPLASTIC PIPE.
   - THE TEST DERIVED CREEP MODULUS AS SPECIFIED IN ASTM F2418 SHALL BE USED FOR PERMANENT DEAD LOAD DESIGN EXCEPT THAT IT SHALL BE THE 75-YEAR MODULUS USED FOR DESIGN.
9. CHAMBERS AND END CAPS SHALL BE PRODUCED AT AN ISO 9001 CERTIFIED MANUFACTURING FACILITY.

IMPORTANT - NOTES FOR THE BIDDING AND INSTALLATION OF MC-3500 CHAMBER SYSTEM

1. STORMTECH MC-3500 CHAMBERS SHALL NOT BE INSTALLED UNTIL THE MANUFACTURER'S REPRESENTATIVE HAS COMPLETED A PRE-CONSTRUCTION MEETING WITH THE INSTALLERS.
2. STORMTECH MC-3500 CHAMBERS SHALL BE INSTALLED IN ACCORDANCE WITH THE "STORMTECH MC-3500/MC-4500 CONSTRUCTION GUIDE".
3. CHAMBERS ARE NOT TO BE BACKFILLED WITH A DOZER OR AN EXCAVATOR SITUATED OVER THE CHAMBERS. STORMTECH RECOMMENDS 3 BACKFILL METHODS:
   - STONESHOOTER LOCATED OFF THE CHAMBER BED.
   - BACKFILL AS ROWS ARE BUILT USING AN EXCAVATOR ON THE FOUNDATION STONE OR SUBGRADE.
   - BACKFILL FROM OUTSIDE THE EXCAVATION USING A LONG BOOM HOE OR EXCAVATOR.
4. THE FOUNDATION STONE SHALL BE LEVELED AND COMPACTED PRIOR TO PLACING CHAMBERS.
5. JOINTS BETWEEN CHAMBERS SHALL BE PROPERLY SEATED PRIOR TO PLACING STONE.
6. MAINTAIN MINIMUM 6" (150 mm) SPACING BETWEEN THE CHAMBER ROWS.
7. INLET AND OUTLET MANIFOLDS MUST BE INSERTED A MINIMUM OF 12" (300 mm) INTO CHAMBER END CAPS.
8. EMBEDMENT STONE SURROUNDING CHAMBERS MUST BE A CLEAN, CRUSHED, ANGULAR STONE MEETING THE AASHTO M43 DESIGNATION OF #3 OR #4.
9. STONE MUST BE PLACED ON THE TOP CENTER OF THE CHAMBER TO ANCHOR THE CHAMBERS IN PLACE AND PRESERVE ROW SPACING.
10. THE CONTRACTOR MUST REPORT ANY DISCREPANCIES WITH CHAMBER FOUNDATION MATERIALS BEARING CAPACITIES TO THE SITE DESIGN ENGINEER.
11. ADS RECOMMENDS THE USE OF "FLEXSTORM CATCH IT" INSERTS DURING CONSTRUCTION FOR ALL INLETS TO PROTECT THE SUBSURFACE STORMWATER MANAGEMENT SYSTEM FROM CONSTRUCTION SITE RUNOFF.

NOTES FOR CONSTRUCTION EQUIPMENT

1. STORMTECH MC-3500 CHAMBERS SHALL BE INSTALLED IN ACCORDANCE WITH THE "STORMTECH MC-3500/MC-4500 CONSTRUCTION GUIDE".
2. THE USE OF EQUIPMENT OVER MC-3500 CHAMBERS IS LIMITED:
   - NO EQUIPMENT IS ALLOWED ON BARE CHAMBERS.
   - NO RUBBER TIRED LOADER, DUMP TRUCK, OR EXCAVATORS ARE ALLOWED UNTIL PROPER FILL DEPTHS ARE REACHED IN ACCORDANCE WITH THE "STORMTECH MC-3500/MC-4500 CONSTRUCTION GUIDE".
   - WEIGHT LIMITS FOR CONSTRUCTION EQUIPMENT CAN BE FOUND IN THE "STORMTECH MC-3500/MC-4500 CONSTRUCTION GUIDE".
3. FULL 36" (900 mm) OF STABILIZED COVER MATERIALS OVER THE CHAMBERS IS REQUIRED FOR DUMP TRUCK TRAVEL OR DUMPING.

USE OF A DOZER TO PUSH EMBEDMENT STONE BETWEEN THE ROWS OF CHAMBERS MAY CAUSE DAMAGE TO CHAMBERS AND IS NOT AN ACCEPTABLE BACKFILL METHOD. ANY CHAMBERS DAMAGED BY USING THE "DUMP AND PUSH" METHOD ARE NOT COVERED UNDER THE STORMTECH STANDARD WARRANTY.

CONTACT STORMTECH AT 1-888-892-2694 WITH ANY QUESTIONS ON INSTALLATION REQUIREMENTS OR WEIGHT LIMITS FOR CONSTRUCTION EQUIPMENT.

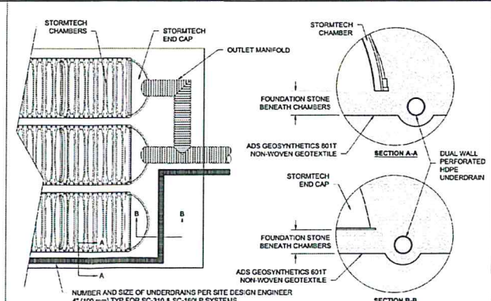

5 UNDERDRAIN DETAIL

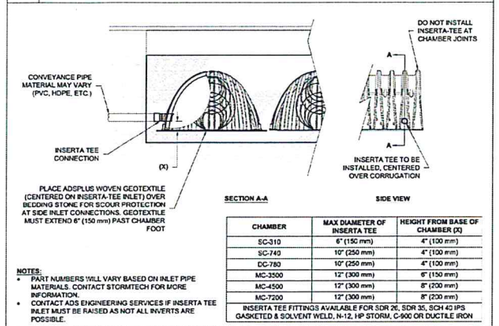

CHAMBER	MAX DIAMETER OF INSERTA TEE	HEIGHT FROM BASE OF CHAMBER (X)
SC-310	6" (150 mm)	4" (100 mm)
SC-740	10" (250 mm)	4" (100 mm)
DC-780	10" (250 mm)	4" (100 mm)
MC-3500	12" (300 mm)	6" (150 mm)
MC-4500	12" (300 mm)	8" (200 mm)
MC-7200	12" (300 mm)	8" (200 mm)
INSERTA TEE FITTINGS AVAILABLE FOR SDR 26, SDR 35, SCH 40 IPS GASKETED & SOLVENT WELD, N-12, HP STORM, C-900 OR DUCTILE IRON		

NOTES:
- PART NUMBERS WILL VARY BASED ON INLET PIPE MATERIALS. CONTACT STORMTECH FOR MORE INFORMATION.
- CONTACT ADS ENGINEERING SERVICES IF INSERTA TEE INLET MUST BE RAISED AS NOT ALL INVERTS ARE POSSIBLE.

6 INSERTA-TEE SIDE INLET DETAIL

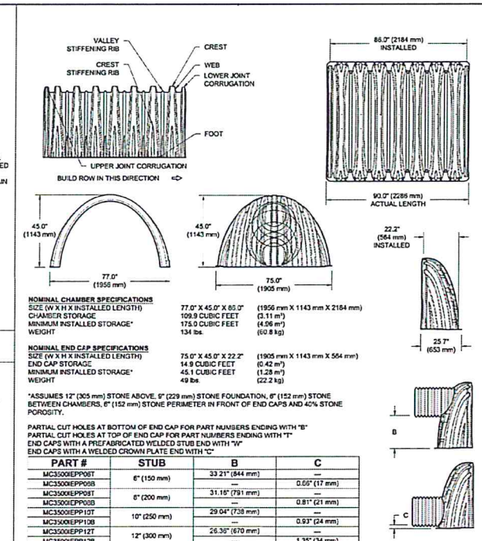

NOMINAL CHAMBER SPECIFICATIONS

SIZE (W X H X INSTALLED LENGTH)	77.0" X 45.0" X 86.0"	(1956 mm X 1143 mm X 2184 mm)
CHAMBER STORAGE	109.9 CUBIC FEET	(3.11 m³)
MINIMUM INSTALLED STORAGE*	175.0 CUBIC FEET	(4.96 m³)
WEIGHT	134 lbs.	(60.8 kg)

NOMINAL END CAP SPECIFICATIONS

SIZE (W X H X INSTALLED LENGTH)	75.0" X 45.0" X 22.2"	(1905 mm X 1143 mm X 564 mm)
END CAP STORAGE	14.9 CUBIC FEET	(0.42 m³)
MINIMUM INSTALLED STORAGE*	45.1 CUBIC FEET	(1.28 m³)
WEIGHT	49 lbs.	(22.2 kg)

*ASSUMES 12" (305 mm) STONE ABOVE, 9" (229 mm) STONE FOUNDATION, 6" (152 mm) STONE BETWEEN CHAMBERS, 6" (152 mm) STONE PERIMETER IN FRONT OF END CAPS AND 40% STONE POROSITY.

PARTIAL CUT HOLES AT BOTTOM OF END CAP FOR PART NUMBERS ENDING WITH "B"
PARTIAL CUT HOLES AT TOP OF END CAP FOR PART NUMBERS ENDING WITH "T"
END CAPS WITH A PREFABRICATED WELDED STUB END WITH "W"
END CAPS WITH A WELDED CROWN PLATE END WITH "C"

PART #	STUB	B	C
MC3500IEPP06T	6" (150 mm)	33.21" (844 mm)	—
MC3500IEPP06B		—	0.69" (17 mm)
MC3500IEPP08T	8" (200 mm)	31.18" (791 mm)	—
MC3500IEPP08B		—	0.81" (21 mm)
MC3500IEPP10T	10" (250 mm)	29.04" (738 mm)	—
MC3500IEPP10B		—	0.97" (24 mm)
MC3500IEPP12T	12" (300 mm)	26.38" (670 mm)	—
MC3500IEPP12B		—	1.35" (34 mm)
MC3500IEPP15T	15" (375 mm)	23.38" (594 mm)	—
MC3500IEPP15B		—	1.50" (38 mm)
MC3500IEPP18TC	18" (450 mm)	20.03" (509 mm)	—
MC3500IEPP18TW			—
MC3500IEPP18BC		—	1.77" (45 mm)
MC3500IEPP18BW			
MC3500IEPP24TC	24" (600 mm)	14.48" (368 mm)	—
MC3500IEPP24TW			
MC3500IEPP24BC		—	2.08" (52 mm)
MC3500IEPP24BW			
MC3500IEPP30BC	30" (750 mm)	—	2.75" (70 mm)

NOTE: ALL DIMENSIONS ARE NOMINAL

2 MC-3500 TECHNICAL SPECIFICATIONS

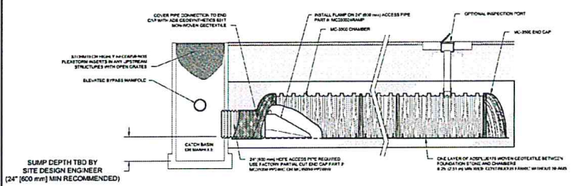

INSPECTION & MAINTENANCE

STEP 1) INSPECT ISOLATOR ROW PLUS FOR SEDIMENT
- A. INSPECTION PORTS (IF PRESENT)
  - A.1. REMOVE/OPEN LID ON NYLOPLAST INLINE DRAIN
  - A.2. REMOVE AND CLEAN FLEXSTORM FILTER IF INSTALLED
  - A.3. USING A FLASHLIGHT AND STADIA ROD, MEASURE DEPTH OF SEDIMENT AND RECORD ON MAINTENANCE LOG
  - A.4. LOWER A CAMERA INTO ISOLATOR ROW PLUS FOR VISUAL INSPECTION OF SEDIMENT LEVELS (OPTIONAL)
  - A.5. IF SEDIMENT IS AT, OR ABOVE, 3" (80 mm) PROCEED TO STEP 2. IF NOT, PROCEED TO STEP 3.
- B. ALL ISOLATOR PLUS ROWS
  - B.1. REMOVE COVER FROM STRUCTURE AT UPSTREAM END OF ISOLATOR ROW PLUS
  - B.2. USING A FLASHLIGHT, INSPECT DOWN THE ISOLATOR ROW PLUS THROUGH OUTLET PIPE
    - i) MIRRORS ON POLES OR CAMERAS MAY BE USED TO AVOID A CONFINED SPACE ENTRY
    - ii) FOLLOW OSHA REGULATIONS FOR CONFINED SPACE ENTRY IF ENTERING MANHOLE
  - B.3. IF SEDIMENT IS AT, OR ABOVE, 3" (80 mm) PROCEED TO STEP 2. IF NOT, PROCEED TO STEP 3.

STEP 2) CLEAN OUT ISOLATOR ROW PLUS USING THE JETVAC PROCESS
- A. A FIXED CULVERT CLEANING NOZZLE WITH REAR FACING SPREAD OF 45" (1.1 m) OR MORE IS PREFERRED
- B. APPLY MULTIPLE PASSES OF JETVAC UNTIL BACKFLUSH WATER IS CLEAN
- C. VACUUM STRUCTURE SUMP AS REQUIRED

STEP 3) REPLACE ALL COVERS, GRATES, FILTERS, AND LIDS; RECORD OBSERVATIONS AND ACTIONS.

STEP 4) INSPECT AND CLEAN BASINS AND MANHOLES UPSTREAM OF THE STORMTECH SYSTEM.

NOTES

1. INSPECT EVERY 6 MONTHS DURING THE FIRST YEAR OF OPERATION. ADJUST THE INSPECTION INTERVAL BASED ON PREVIOUS OBSERVATIONS OF SEDIMENT ACCUMULATION AND HIGH WATER ELEVATIONS.
2. CONDUCT JETTING AND VACTORING ANNUALLY OR WHEN INSPECTION SHOWS THAT MAINTENANCE IS NECESSARY.

3 MC-3500 ISOLATOR ROW PLUS DETAIL

ACCEPTABLE FILL MATERIALS: STORMTECH MC-3500 CHAMBER SYSTEMS

	MATERIAL LOCATION	DESCRIPTION	AASHTO MATERIAL CLASSIFICATIONS	COMPACTION / DENSITY REQUIREMENT
D	**FINAL FILL:** FILL MATERIAL FOR LAYER 'D' STARTS FROM THE TOP OF THE 'C' LAYER TO THE BOTTOM OF FLEXIBLE PAVEMENT OR UNPAVED FINISHED GRADE ABOVE. NOTE THAT PAVEMENT SUBBASE MAY BE PART OF THE 'D' LAYER	ANY SOIL/ROCK MATERIALS, NATIVE SOILS, OR PER ENGINEER'S PLANS. CHECK PLANS FOR PAVEMENT SUBGRADE REQUIREMENTS	N/A	PREPARE PER SITE DESIGN ENGINEER'S PLANS. PAVED INSTALLATIONS MAY HAVE STRINGENT MATERIAL AND PREPARATION REQUIREMENTS.
C	**INITIAL FILL:** FILL MATERIAL FOR LAYER 'C' STARTS FROM THE TOP OF THE EMBEDMENT STONE ('B' LAYER) TO 24" (600 mm) ABOVE THE TOP OF THE CHAMBER. NOTE THAT PAVEMENT SUBBASE MAY BE A PART OF THE 'C' LAYER.	GRANULAR WELL-GRADED SOIL/AGGREGATE MIXTURES, <35% FINES OR PROCESSED AGGREGATE. MOST PAVEMENT SUBBASE MATERIALS CAN BE USED IN LIEU OF THIS LAYER.	AASHTO M145[1] A-1, A-2-4, A-3 OR AASHTO M43[1] 3, 357, 4, 467, 5, 56, 57, 6, 67, 68, 7, 78, 8, 89, 9, 10	BEGIN COMPACTIONS AFTER 24" (600 mm) OF MATERIAL OVER THE CHAMBERS IS REACHED. COMPACT ADDITIONAL LAYERS IN 12" (300 mm) MAX LIFTS TO A MIN. 95% PROCTOR DENSITY FOR WELL GRADED MATERIAL AND 95% RELATIVE DENSITY FOR PROCESSED AGGREGATE MATERIALS.
B	**EMBEDMENT STONE:** FILL SURROUNDING THE CHAMBERS FROM THE FOUNDATION STONE ('A' LAYER) TO THE 'C' LAYER ABOVE.	CLEAN, CRUSHED, ANGULAR STONE	AASHTO M43[1] 3, 4	NO COMPACTION REQUIRED.
A	**FOUNDATION STONE:** FILL BELOW CHAMBERS FROM THE SUBGRADE UP TO THE FOOT (BOTTOM) OF THE CHAMBER.	CLEAN, CRUSHED, ANGULAR STONE	AASHTO M43[1] 3, 4	PLATE COMPACT OR ROLL TO ACHIEVE A FLAT SURFACE.[2,3]

PLEASE NOTE:
1. THE LISTED AASHTO DESIGNATIONS ARE FOR GRADATIONS ONLY. THE STONE MUST ALSO BE CLEAN, CRUSHED, ANGULAR. FOR EXAMPLE, A SPECIFICATION FOR #4 STONE WOULD STATE: "CLEAN, CRUSHED, ANGULAR NO. 4 (AASHTO M43) STONE".
2. STORMTECH COMPACTION REQUIREMENTS ARE MET FOR 'A' LOCATION MATERIALS WHEN PLACED AND COMPACTED IN 9" (230 mm) (MAX) LIFTS USING TWO FULL COVERAGES WITH A VIBRATORY COMPACTOR.
3. WHERE INFILTRATION SURFACES MAY BE COMPROMISED BY COMPACTION, FOR STANDARD DESIGN LOAD CONDITIONS, A FLAT SURFACE MAY BE ACHIEVED BY RAKING OR DRAGGING WITHOUT COMPACTION EQUIPMENT. FOR SPECIAL LOAD DESIGNS, CONTACT STORMTECH FOR COMPACTION REQUIREMENTS.
4. ONCE LAYER 'C' IS PLACED, ANY SOIL/MATERIAL CAN BE PLACED IN LAYER 'D' UP TO THE FINISHED GRADE. MOST PAVEMENT SUBBASE SOILS CAN BE USED TO REPLACE THE MATERIAL REQUIREMENTS OF LAYER 'C' OR 'D' AT THE SITE DESIGN ENGINEER'S DISCRETION.

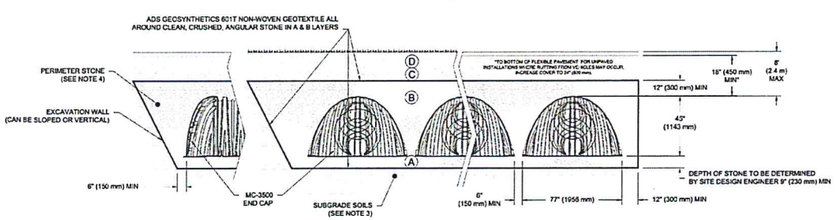

NOTES:

1. CHAMBERS SHALL MEET THE REQUIREMENTS OF ASTM F2418, "STANDARD SPECIFICATION FOR POLYPROPYLENE (PP) CORRUGATED WALL STORMWATER COLLECTION CHAMBERS" CHAMBER CLASSIFICATION 45478 DESIGNATION SS.
2. MC-3500 CHAMBERS SHALL BE DESIGNED IN ACCORDANCE WITH ASTM F2787 "STANDARD PRACTICE FOR STRUCTURAL DESIGN OF THERMOPLASTIC CORRUGATED WALL STORMWATER COLLECTION CHAMBERS".
3. THE SITE DESIGN ENGINEER IS RESPONSIBLE FOR ASSESSING THE BEARING RESISTANCE (ALLOWABLE BEARING CAPACITY) OF THE SUBGRADE SOILS AND THE DEPTH OF FOUNDATION STONE WITH CONSIDERATION FOR THE RANGE OF EXPECTED SOIL MOISTURE CONDITIONS.
4. PERIMETER STONE MUST BE EXTENDED HORIZONTALLY TO THE EXCAVATION WALL FOR BOTH VERTICAL AND SLOPED EXCAVATION WALLS.
5. REQUIREMENTS FOR HANDLING AND INSTALLATION:
   - TO MAINTAIN THE WIDTH OF CHAMBERS DURING SHIPPING AND HANDLING, CHAMBERS SHALL HAVE INTEGRAL, INTERLOCKING STACKING LUGS.
   - TO ENSURE A SECURE JOINT DURING INSTALLATION AND BACKFILL, THE HEIGHT OF THE CHAMBER JOINT SHALL NOT BE LESS THAN 3".
   - TO ENSURE THE INTEGRITY OF THE ARCH SHAPE DURING INSTALLATION, a) THE ARCH STIFFNESS CONSTANT AS DEFINED IN SECTION 6.2.8 OF ASTM F2418 SHALL BE GREATER THAN OR EQUAL TO 500 LBS/FT/%. AND b) TO RESIST CHAMBER DEFORMATION DURING INSTALLATION AT ELEVATED TEMPERATURES (ABOVE 73° F / 23° C), CHAMBERS SHALL BE PRODUCED FROM REFLECTIVE GOLD OR YELLOW COLORS.

1 MC-3500 CROSS SECTION DETAIL

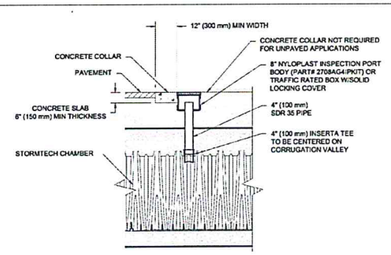

NOTE:
INSPECTION PORTS MAY BE CONNECTED THROUGH ANY CHAMBER CORRUGATION VALLEY.

4 4" PVC INSPECTION PORT DETAIL (MC SERIES CHAMBER)

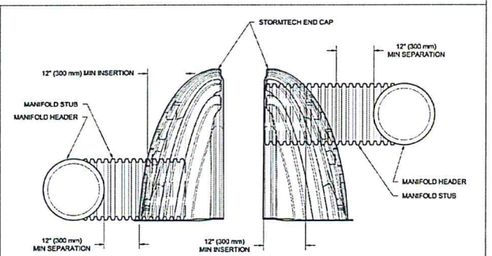

NOTE: MANIFOLD STUB MUST BE LAID HORIZONTAL FOR A PROPER FIT IN END CAP OPENING.

7 MC-SERIES END CAP INSERTION DETAIL

DRAWN:
REVIEWED:
REV:
DATE:
PROJECT NO:
NOT TO SCALE

MC-3500 STANDARD DETAILS

StormTech® Chamber System
888-892-2694 | WWW.STORMTECH.COM

4640 TRUEMAN BLVD HILLIARD, OH 43026

ADS Advanced Drainage Systems, Inc.

SHEET

ADVANCED DRAINAGE SYSTEMS, INC. ("ADS") HAS PREPARED THIS DETAIL BASED ON REFERENCED STANDARDS. ADS HAS NOT PERFORMED ANY ENGINEERING OR DESIGN SERVICES FOR THIS PROJECT, NOR HAS ADS INDEPENDENTLY VERIFIED THE INFORMATION SUPPLIED. THE INSTALLATION DETAILS PROVIDED HEREIN ARE GENERAL RECOMMENDATIONS AND ARE NOT SPECIFIC FOR THIS PROJECT. UNLESS THE PLANS ARE SIGNED AND SEALED BY THE SITE DESIGN ENGINEER, THE SITE DESIGN ENGINEER SHALL REVIEW THESE DETAILS PRIOR TO CONSTRUCTION AND SEALING THE DOCUMENT. IT IS THE SITE DESIGN ENGINEERS RESPONSIBILITY TO ENSURE THE DETAILS PROVIDED HEREIN MEETS OR EXCEEDS THE APPLICABLE NATIONAL, STATE, OR LOCAL REQUIREMENTS AND TO ENSURE THAT THE DETAILS PROVIDED HEREIN ARE ACCEPTABLE FOR THIS PROJECT.

No.	REVISIONS	DATE	BY

SCALE: AS NOTED
DESIGNED BY: CSM
DRAWN BY: GWE
CHECKED BY: CSM

Kimley»Horn
© 2024 KIMLEY-HORN AND ASSOCIATES, INC.
500 EAST 96TH STREET, SUITE 300,
INDIANAPOLIS, IN 46240
PHONE: 317-218-9560
WWW.KIMLEY-HORN.COM

CHAD STEVEN MAYES
REGISTERED
PE
INDIANA
PROFESSIONAL ENGINEER
NOT APPROVED FOR CONSTRUCTION

MIRA DEVELOPMENT

CONSTRUCTION DETAILS

HOME2 SUITES MUNCIE HOTEL
NWC BETHEL AVE & N MARLEON DR
MUNCIE, IN 47304

ORIGINAL ISSUE: 08/04/2023
KHA PROJECT NO. 170313001
SHEET NUMBER
C7.5

ing name: K:\IND_LDEV\170313001_MinoDevelopment_Muncie\Hotel_Muncie_IN\2 Design\CADD\PlanSheets\C7.0-CONSTRUCTION DETAILS.dwg C7.5 Apr 01, 2024 7:05pm by: ChadMayes
r document, together with the concepts and designs presented herein, as an instrument of service, is intended only for the specific purpose and client for which it was prepared. Reuse of and improper reliance on this document without written authorization and adaptation by Kimley-Horn and Associates, Inc. shall be without liability to Kimley-Horn and Associates, Inc.

PLANT SCHEDULE

DECIDUOUS TREES	QTY	BOTANICAL NAME	COMMON NAME	CONT	CAL	HT
AA	21	ACER RUBRUM 'AUTUMN FLAME'	AUTUMN FLAME RED MAPLE	B & B	3" CAL MIN	7' HT MIN
GD	10	GYMNOCLADUS DIOICA `ESPRESSO`	KENTUCKY COFFEETREE	B & B	3" CAL MIN	7' HT MIN
LT	9	LIRIODENDRON TULIPIFERA	TULIP POPLAR	B & B	3" CAL MIN	7' HT MIN
QR	9	QUERCUS RUBRA	RED OAK	B & B	3" CAL MIN	7' HT MIN
TG	23	TILIA CORDATA 'GREENSPIRE'	GREENSPIRE LITTLELEAF LINDEN	B & B	3" CAL MIN	7' HT MIN
ORNAMENTAL TREES	**QTY**	**BOTANICAL NAME**	**COMMON NAME**	**CONT**	**CAL**	**HT**
MJ	27	MALUS X 'JEWELCOLE' TM	RED JEWEL CRABAPPLE	B & B	2" CAL MIN	5' HT MIN
DECIDUOUS SHRUBS	**QTY**	**BOTANICAL NAME**	**COMMON NAME**	**CONT**	**SPACING**	**SIZE**
HP	32	HYDRANGEA PANICULATA 'LITTLE LIME'	LITTLE LIME PANICLE HYDRANGEA	---	60" O.C.	18" FULL
IV	60	ITEA VIRGINICA `LITTLE HENRY'	LITTLE HENRY SWEETSPIRE	---	48" OC	18" FULL
PO	59	PHYSOCARPUS OPULIFOLIUS 'SEWARD'	SUMMER WINE® NINEBARK	---	60" O.C.	18" FULL
VB	48	VIBURNUM X BURKWOODII	BURKWOOD VIBURNUM	---	60" O.C.	18" FULL
EVERGREEN SHRUBS	**QTY**	**BOTANICAL NAME**	**COMMON NAME**	**CONT**	**SPACING**	**SIZE**
IS	45	ILEX GLABRA `STONG BOX'	STRONGBOX INKBERRY HOLLY	---	48" OC	18" FULL
TD	47	TAXUS X MEDIA 'DENSIFORMIS'	DENSE ANGLO-JAPANESE YEW	---	48" OC	18" FULL
GRASSES	**QTY**	**BOTANICAL NAME**	**COMMON NAME**	**CONT**	**SPACING**	**SIZE**
CK	18	CALAMAGROSTIS X ACUTIFLORA 'KARL FOERSTER'	KARL FOERSTER FEATHER REED GRASS	---	30" OC	18" HT MIN
PERENNIALS	**QTY**	**BOTANICAL NAME**	**COMMON NAME**	**CONT**	**SPACING**	**SIZE**
IB	16	IRIS VERSICOLOR	BLUE FLAG	1 GAL	24" OC	
LC	17	LOBELIA CARDINALIS	CARDINAL FLOWER	1 GAL	24" OC	
SEDGES	**CODE**	**QTY**	**BOTANICAL NAME**	**COMMON NAME**	**CONT**	
	CV	80	CAREX VULPINOIDEA	FOX SEDGE	2" PLUG	30" o.c.

Indiana Utilities Protection Service
Call 811 before you dig

NORTH

GRAPHIC SCALE IN FEET
0 15' 30' 60'

MULCHING LEGEND

MULCH
HARDWOOD SHREDDED MULCH, NATURAL BROWN COLOR

SEEDING LEGEND

PERMANENT SEEDING
AMERITURF FRONTRUNNER BLEND TALL FESCUE; APPLY AT A RATE OF 350 LBS/ACRE (8LBS/1000 SQFT)

RIVER ROCK LEGEND

RIVER ROCK
LANDSCAPE GRAVEL RIVER ROCK WITH $\frac{3}{8}$" BROWN STEEL EDGING
SUPPLIER: TIFFANY LAWN & GARDEN SUPPLY

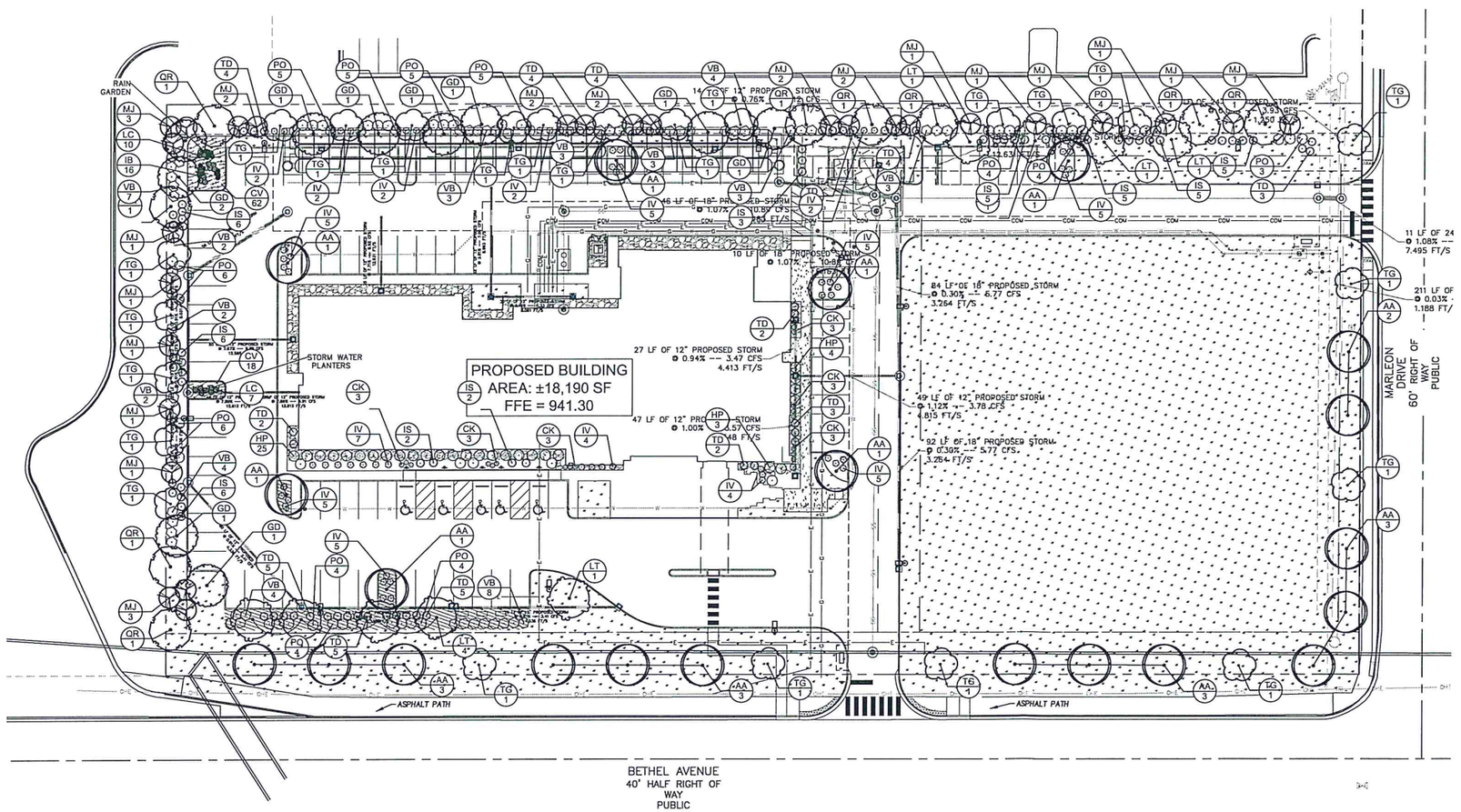

No.	REVISIONS	DATE	BY

Kimley»Horn
©2024 KIMLEY-HORN AND ASSOCIATES, INC.
5201 EAST 65TH STREET, SUITE 300,
INDIANAPOLIS, IN 46240
PHONE: 317-218-9560
WWW.KIMLEY-HORN.COM

SCALE: AS NOTED
DESIGNED BY: MCD
DRAWN BY: MCD
CHECKED BY: CSM

NOT FOR CONSTRUCTION UNTIL APPROVED BY THE ARCHITECT
MICHELE C. RYEN CERTIFIED ARCHITECT

MIRA DEVELOPMENT

LANDSCAPE PLAN

HOME2 SUITES
MUNCIE HOTEL
NWC BETHEL AVE & N MARLEON DR
MUNCIE, IN 47304

ORIGINAL ISSUE: 08/04/2023
KHA PROJECT NO. 170313001
SHEET NUMBER
L1.0

ing name: K:\IND_LDEV\170313001_MiraDevelopment_MuncieHotel_Muncie_IN\2 Design\CADD\PlanSheets\L1-0-LANDSCAPE PLAN.dwg C3.0 Apr 01, 2024 7:09pm by: ChadAbyee
r document, together with the concepts and designs presented herein, as an instrument of service, is intended only for the specific purpose and client for which it was prepared. Reuse of and improper reliance on this document without written authorization and adaptation by Kimley-Horn and Associates, Inc. shall be without liability to Kimley-Horn and Associates, Inc.

Drawing name: K:\IND_LDEV\170313001_JiffyDevelopment_Muncie\Muncie_IN\2 Design\CADD\PlanSheets\L1-D-LANDSCAPE PLAN.dwg CLD (3) Apr 01, 2024 7:09pm by: ChadAbyes
Improper reliance on this document without written authorization and adaptation by Kimley-Horn and Associates, Inc. shall be without liability to Kimley-Horn and Associates, Inc. This document, together with the concepts and designs presented herein, as an instrument of service, is intended only for the specific purpose and client for which it was prepared. Reuse of and

ORDINANCE CHART

ZONING: BV - Variety Business		
REQUIREMENT	REQUIRED	PROVIDED
Article XXX Section 7.G.3 FOUNDATION PLANTINGS		
• Foundation plantings shall be included withing 15 feet of the friont façade, any façade visible from a public ROW, and any façade with a dedicated public entrance.	•Foundation plantings along the front facade	•Foundation plantings along the front facade
Article XXX Section 7.G.4 PLANTINGS IN REQUIRED FRONT YARDS		
• 1 shade or evergreen tree per 40 LF or 1 ornamental tree per 20 LF	• Bethel Ave: 567 LF / 40 = 14 shade trees • Marleon Dr: 271 LF / 40 = 7 shade trees	•Bethel Ave: 14 shade trees • Marleon Dr: 7 shade trees
Article XXX Section 7.G.5 PERIMETER BUFFERING TYPE C		
• Type C = 3 shade trees + 3 ornamental trees + 15 shrubs per 100 LF	North: 567 LF • 5.67(3) = 17 shade trees • 5.67(3) = 17 ornamental trees • 5.67(15) = 85 shrubs West: 271 LF • 2.71(3) = 8 shade trees • 2.71(3) = 8 ornamental trees • 2.71(15) = 41 shrubs	North: 567 LF • 17 shade trees • 17 ornamental trees • 85 shrubs West: 271 LF • 8 shade trees • 8 ornamental trees • 41 shrubs
Article XXX Section 7.G.7 SCREENING OF SERVICE AREAS		
• Trash collection areas, drainage basins, outdoor storage, satellite dishes, HVAC systems, loading dock areas, and similar service areas shall be screened from public view and from adjacent non-commercial, non-industrial properties.	• Screening provided	• Screening provided
Article XXX Section 7.G.8 LANDSCAPE IN PARKING LOTS		
• 1 shade tree + 5 shrubs for every 7 spaces, not less than 20 trees per parking lot acre • 1 shade tree + 5 shrubs for every 5 spaces where parking areas are located in the front yard, not less than 24 trees per parking lot acre • 1 landscape island per 20 spaces • 1 tree per landscape island	Front Yard Parking Area = 49 spaces • 52 / 5 = 10 trees • (52 / 5)*5 =52 shrubs Side and Rear Parking Area = 65 spaces • 63 / 7 = 9 trees • (63 / 7)*5 = 45 shrubs 114 total spaces • 115 / 20 = 6 islands • 6 islands = 6 trees	Front Yard Parking Area = 49 spaces • 10 trees • 49 shrubs Side and Rear Parking Area = 65 spaces • 9 trees • 46 shrubs 115 total spaces • 7 islands • 7 trees
Article XXX Section 7.M.8 SUSTAINABILITY STANDARDS		
• Each new development project is required to emply at least 1 of the following sustainability methods for treatment of stormwater generated: -Green roofs -Rain garden -Bio-swales -Stormwater planters -Porous paving • Alternative sustainable methods not listed above may be submitted to the Plan Commission staff for approval. Where a project propsal incorporates more than one approved sustainable method, the project design may utilize an automatic building setback variance of 5 feet in any direction, provided the required bufferyard for adjacent residential use is not decreased, or an automatic 10% decrease in the number of required parking spaces, provided all bike rack requirements are met prior to the 10% decrease.	Selected sustainability methods: • Rain garden • Stormwater planter	Selected sustainability methods: • Rain garden • Stormwater planter

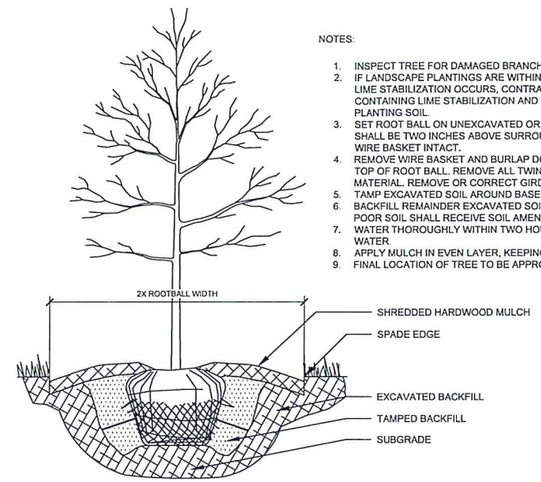

NOTES:

1. INSPECT TREE FOR DAMAGED BRANCHES, APPLY CORRECTIVE PRUNING.
2. IF LANDSCAPE PLANTINGS ARE WITHIN OR ADJACENT TO AREAS WHERE LIME STABILIZATION OCCURS, CONTRACTOR SHALL FULLY REMOVE SOIL CONTAINING LIME STABILIZATION AND REPLACE WITH HIGH QUALITY PLANTING SOIL.
3. SET ROOT BALL ON UNEXCAVATED OR TAMPED SOIL. TOP OF ROOTBALL SHALL BE TWO INCHES ABOVE SURROUNDING GRADE WITH BURLAP AND WIRE BASKET INTACT.
4. REMOVE WIRE BASKET AND BURLAP DOWN FOUR TO SIX INCHES BELOW TOP OF ROOT BALL. REMOVE ALL TWINE AND (IF USED), SYNTHETIC MATERIAL. REMOVE OR CORRECT GIRDLING ROOTS.
5. TAMP EXCAVATED SOIL AROUND BASE OF ROOTBALL.
6. BACKFILL REMAINDER EXCAVATED SOIL TAMPED LIGHTLY. HIGH CLAY OR POOR SOIL SHALL RECEIVE SOIL AMENDMENT PER LANDSCAPE NOTES.
7. WATER THOROUGHLY WITHIN TWO HOURS USING 10 TO 15 GALLONS OF WATER.
8. APPLY MULCH IN EVEN LAYER, KEEPING AWAY FROM ROOT FLARE.
9. FINAL LOCATION OF TREE TO BE APPROVED BY OWNER.

1 TREE PLANTING

NTS

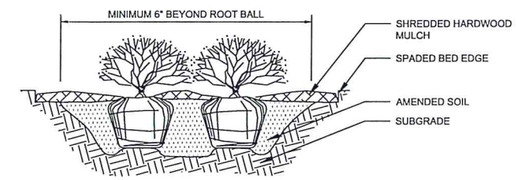

NOTES:

1. APPLY CORRECTIVE PRUNING.
2. SET ROOT BALL OR CONTAINER ON UNEXCAVATED OR TAMPED SOIL. TOP OF ROOTBALL (CONTAINER) SHALL BE ONE INCH ABOVE SURROUNDING GRADE. FOR LARGER SHRUBS WITHIN PLANTING BED DIG A DEEPER PIT ONLY FOR THOSE SHRUBS.
3. REMOVE BURLAP FROM TOP HALF THE LENGTH OF ROOTBALL. TWINE AND (IF USED) SYNTHETIC MATERIAL SHALL BE REMOVED FROM PLANTING BED. FOR CONTAINER GROWN SHRUBS, REMOVE CONTAINER AND LOOSEN ROOTS PRIOR TO INSTALLATION.
4. REMOVE OR CORRECT GIRDLING ROOTS.
5. PLUMB AND BACKFILL WITH AMENDED SOIL PER LANDSCAPE NOTES. WATER THOROUGHLY WITHIN TWO HOURS.
6. APPLY MULCH IN EVEN LAYER, KEEPING AWAY FROM ROOT FLARE. MULCH LIMITS FOR SHRUBS EXTEND TO ALL LIMITS OF PLANTING BED, SEE PLANS FOR BED LAYOUTS.

2 SHRUB PLANTING

NTS

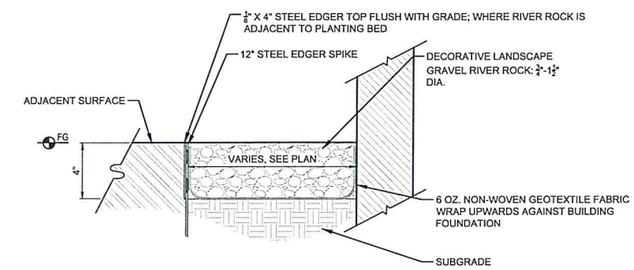

3 RIVER ROCK WITH STEEL EDGING

NTS

LANDSCAPE NOTES

1. THE LANDSCAPE CONTRACTOR SHALL BE RESPONSIBLE FOR INSTALLING MATERIALS AND PLANTS SHOWN ON THE LANDSCAPE PLAN. THE CONTRACTOR IS RESPONSIBLE FOR THE COST TO REPAIR UTILITIES, ADJACENT LANDSCAPE, PUBLIC AND PRIVATE PROPERTY THAT IS DAMAGED BY THE CONTRACTOR OR THEIR SUBCONTRACTOR'S OPERATIONS DURING INSTALLATION OR DURING THE SPECIFIED MAINTENANCE PERIOD. CALL FOR UTILITY LOCATIONS PRIOR TO ANY EXCAVATION AND PLANTING.
2. THE CONTRACTOR SHALL REPORT ANY DISCREPANCY IN PLAN VS. FIELD CONDITIONS IMMEDIATELY TO THE LANDSCAPE ARCHITECT, PRIOR TO CONTINUING WITH THAT PORTION OF WORK.
3. THE CONTRACTOR SHALL BE RESPONSIBLE FOR THE REPAIR OF ANY OF THEIR TRENCHES OR EXCAVATIONS THAT SETTLE.
4. ALL NURSERY STOCK SHALL BE WELL BRANCHED, HEALTHY, FULL, PRE-INOCULATED AND FERTILIZED. DECIDUOUS TREES SHALL BE FREE OF FRESH SCARS. TRUNKS WILL BE WRAPPED IF NECESSARY TO PREVENT SUN SCALD AND INSECT DAMAGE. THE LANDSCAPE CONTRACTOR SHALL REMOVE THE WRAP AT THE PROPER TIME AS A PART OF THIS CONTRACT.
5. ALL NURSERY STOCK SHALL BE GUARANTEED, BY THE CONTRACTOR, FOR ONE YEAR FROM DATE OF FINAL INSPECTION.
6. PLANTING AREA SOIL SHALL BE TOPSOIL FOR ALL TREE, SHRUB, ORNAMENTAL GRASS, PERENNIAL, AND ANNUAL BEDS. AMENDED SOIL SHALL BE PROVIDED AND GRADED BY THE GENERAL CONTRACTOR UP TO A 6" DEPTH BELOW FINISHED GRADE IN TURF AREAS AND A 12" DEPTH IN PLANTING AREAS.
7. PLANTING AREA TOPSOIL SHALL BE AMENDED WITH 25% SPHAGNUM PEATMOSS, 5% HUMUS AND 65% PULVERIZED SOIL. AMENDED TURF AREA SOIL SHALL BE STANDARD TOPSOIL. TOPSOIL SHALL CONFORM TO TECHNICAL SPECIFICATIONS FREE OF HEAVY CLAY, ROCKS, AND DIRT CLODS OVER 1 INCH IN DIAMETER, AS WELL AS CONTAIN 3%-5% OF ORGANIC MATTER.
8. SEED/SOD LIMIT LINES ARE APPROXIMATE. CONTRACTOR SHALL SEED/SOD ALL AREAS WHICH ARE DISTURBED BY GRADING WITH THE SPECIFIED SEED/SOD MIXES.
9. CONTRACTOR SHALL STAKE INDIVIDUAL TREE AND SHRUB LOCATIONS AND OUTLINE HERBACEOUS PLANTING AREAS, SHALL ADJUST LOCATIONS WHEN REQUESTED, AND SHALL OBTAIN PROJECT LANDSCAPE ARCHITECT'S ACCEPTANCE PRIOR TO PLANTING.
10. ALL PLANT ID TAGS SHALL BE REMOVED AFTER INSTALLATION.
11. CONTRACTOR SHALL INSTALL SHREDDED HARDWOOD MULCH AT A 3" DEPTH TO ALL TREES, SHRUB, PERENNIAL, AND GROUNDCOVER AREAS. TREES PLACED IN AREA COVERED BY TURF SHALL RECEIVE A 4 FT WIDE MAXIMUM TREE RING WITH 3" DEPTH SHREDDED HARDWOOD MULCH. A SPADED BED EDGE SHALL SEPARATE MULCH BEDS FROM TURF OR SEEDED AREAS. A SPADED EDGE IS NOT REQUIRED ALONG CURBED EDGES.
12. WEED FABRIC SHALL BE APPLIED UNDER MULCH.
13. MULCH SHALL NOT BE HELD IN PLACE BY PLASTIC NET, OR SPRAYING OF ANY BINDER MATERIAL OR ASPHALT EMULSION.
14. DO NOT DISTURB THE EXISTING PAVING, LIGHTING, OR LANDSCAPING THAT EXISTS ADJACENT TO THE SITE UNLESS OTHERWISE NOTED ON PLAN.
15. PLANT QUANTITIES SHOWN ARE FOR THE CONVENIENCE OF THE OWNER AND JURISDICTIONAL REVIEW AGENCIES. THE CONTRACTOR IS RESPONSIBLE FOR VERIFYING ALL PLANT QUANTITIES AS DRAWN.
16. THE OWNER'S REPRESENTATIVE MAY REJECT ANY PLANT MATERIALS THAT ARE DISEASED, DEFORMED, OR OTHERWISE NOT EXHIBITING SUPERIOR QUALITY.
17. WEEDING, LANDSCAPE MAINTENANCE, AND WATERING TO BE THE CONTRACTOR'S RESPONSIBILITY DURING CONSTRUCTION. ALL PLANT MATERIALS REQUIRED BY THIS SECTION SHALL BE MAINTAINED AS LIVING VEGETATION AND SHALL BE PROMPTLY REPLACED BY LANDSCAPE CONTRACTOR DURING WARRANTY PERIOD IF THE PLANT MATERIAL HAS DIED PRIOR TO FINAL ACCEPTANCE. PLANTING AREAS SHALL BE KEPT FREE OF TRASH, LITTER, AND WEEDS AT ALL TIMES.
18. THE CONTINUED MAINTENANCE OF ALL REQUIRED LANDSCAPING AFTER WARRANTY PERIOD EXPIRES SHALL BE THE RESPONSIBILITY OF THE OWNER OF THE PROPERTY ON WHICH SAID MATERIALS ARE REQUIRED.

Indiana Utilities Protection Service
Call 811
before you dig

No.	REVISIONS	DATE	BY

Kimley»Horn
©2024 KIMLEY-HORN AND ASSOCIATES, INC.
500 EAST 96TH STREET, SUITE 300,
INDIANAPOLIS, IN 46240
PHONE: 317-218-9560
WWW.KIMLEY-HORN.COM

SCALE: AS NOTED
DESIGNED BY: MCD
DRAWN BY: MCD
CHECKED BY: CSM

MICHELE C. ABYES
CERTIFICATE NUMBER
STATE OF INDIANA
LICENSED ARCHITECT
NOT APPROVED FOR CONSTRUCTION
Michele Abyes

MIRA DEVELOPMENT

LANDSCAPE DETAILS

HOME2 SUITES MUNCIE HOTEL
NWC BETHEL AVE & N MARLEON DR
MUNCIE, IN 47304

ORIGINAL ISSUE: 08/04/2023
KHA PROJECT NO. 170313001
SHEET NUMBER
L1.1

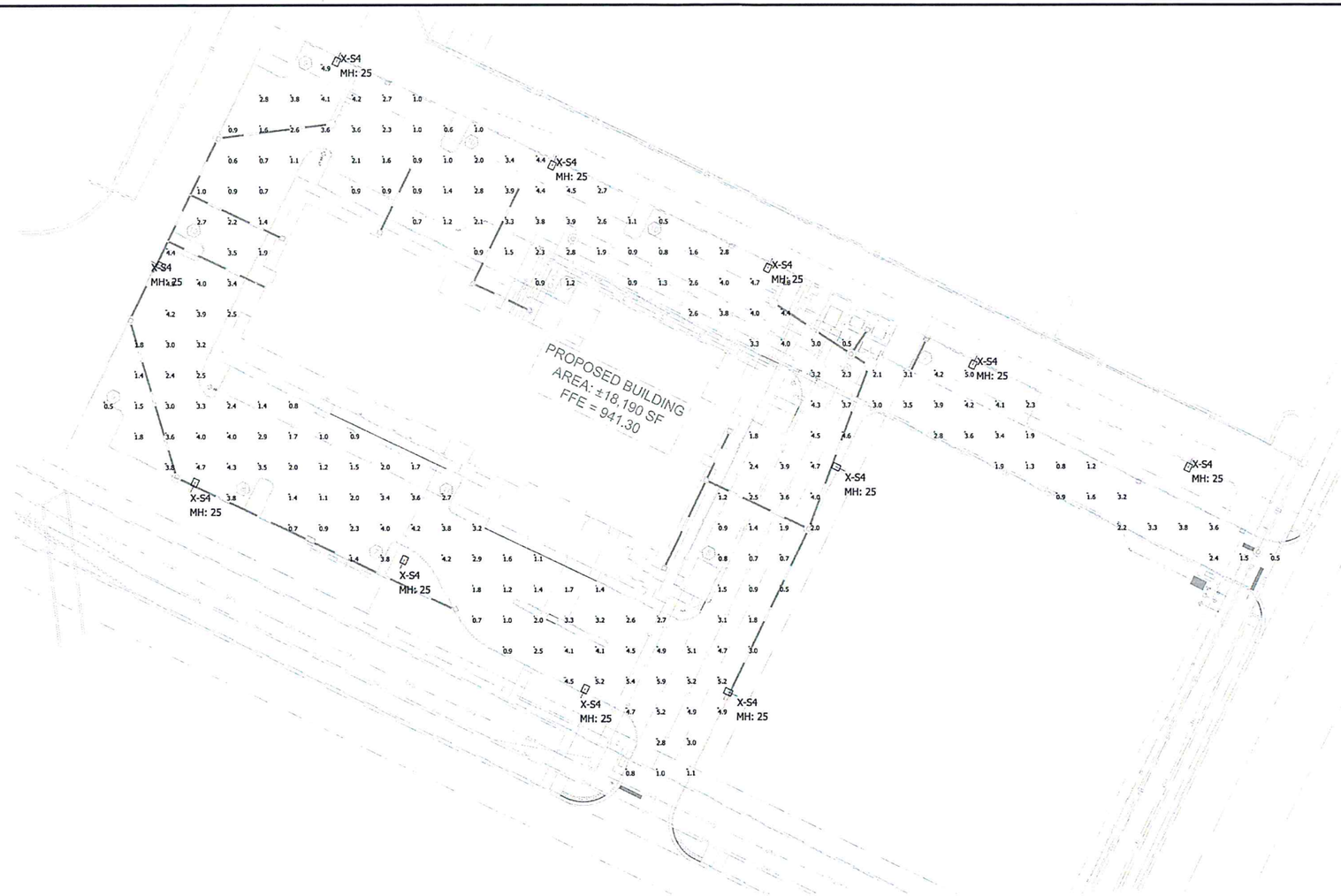

Luminaire Schedule							
Symbol	Qty	Label	Arrangement	Lum. Lumens	LLF	Lum. Watts	Description
	11	X-S4	Single	22581	0.900	196	DL150150

Calculation Summary							
Label	CalcType	Units	Avg	Max	Min	Avg/Min	Max/Min
Paved Areas & Drives	Illuminance	Fc	2.60	5.9	0.5	5.20	11.80

NOTE:
1. THE FIXTURE IS THE 30K CCT OPTION (SEE CONSTRUCTION DETAILS)

LIGHTING NOTES:

- Mounting Height = 25'
- Light Loss Factor = 0.90
- Footcandle Values Calculated @ 3' A.F.F.
- Reflectance Values - 80/50/20 (office spaces)
  50/30/20 (warehouse areas)

National Lighting Vendor:
For pricing and technical assistance contact:
Russ Miller of CBMC INC, tel# 317-697-7510,
rmiller@cbmcinc.com

All electrical work shall comply with National, State, and Local codes including and not limited to the National Electric Code, NFPA 101 Life Safety Code, ASHREA and /or IECC Energy Codes.

The information contained in this document is proprietary to CBMC Lighting Solutions. This document is prepared for a specific site and incorporates calculations based on data available from the client at this time. By accepting and using this document, the recipient agrees to protect its contents from further dissemination, (other than that within the organization necessary to evaluate such specification) without the written permission of CBMC Lighting Solutions. the contents of this document are not to be reproduced or copied in whole or in part without the written permission of

CBMC · LIGHTING SOLUTIONS
5855 KOPETSKY DR. SUITE G. | INDIANAPOLIS, IN 46217
317-780-8350| WWW.CBMCINC.COM

SEE MORE

This lighting pattern represents illumination levels calculated from laboratory data taken under controlled conditions in accordance with IESNA approved methods. Actual performance of any manufacturer's luminaire may vary due to variation in electrical voltage, tolerance in lamps and LED lumen package, location adjustments, and other variable field conditions.

Mira - Muncie Hotel
(Home 2 Suites)

SITE LAYOUT

Scale:	1" = 30'	Drawing No:	LP1
Date:	5/26/23	Project No:	CB23459-SITE-2
Drawn By:	SJM		

GENERAL NOTES

1. THE MUNICIPALITY REQUIREMENTS AND THE LATEST INDIANA DEPARTMENT OF TRANSPORTATION (INDOT) STANDARD SPECIFICATIONS INCLUDING CHANGES SHALL GOVERN ALL CONSTRUCTION ITEMS THAT ARE A PART OF THIS PLAN UNLESS OTHERWISE NOTED. WHEN CONFLICTS ARISE BETWEEN ABOVE LISTED SPECIFICATIONS, THE MORE STRINGENT SHALL TAKE PRECEDENCE.

2. STANDARD SPECIFICATIONS, SUPPLEMENTAL SPECIFICATIONS, AND RECURRING SPECIAL PROVISIONS, CONSTRUCTION PLANS, AND SUBSEQUENT DETAILS ARE ALL TO BE CONSIDERED AS PART OF THE CONTRACT. INCIDENTAL ITEMS OR ACCESSORIES NECESSARY TO COMPLETE THIS WORK MAY NOT BE SPECIFICALLY NOTED, BUT ARE CONSIDERED A PART OF THIS CONTRACT.

3. THE CONTRACTOR SHALL BE RESPONSIBLE FOR HAVING THE UTILITY COMPANIES LOCATE THEIR FACILITIES IN THE FIELD PRIOR TO CONSTRUCTION AND SHALL ALSO BE RESPONSIBLE FOR THE MAINTENANCE AND PRESERVATION OF THESE FACILITIES. THE ENGINEER DOES NOT WARRANT THE LOCATION OF ANY EXISTING UTILITIES SHOWN ON THE PLAN. THE CONTRACTOR SHALL CALL INDIANA UTILITIES PROTECTION SERVICE (811 OR 1.800.382.2764) AND THE MUNICIPALITY FOR UTILITY LOCATIONS.

4. NO CONSTRUCTION PLANS SHALL BE USED FOR CONSTRUCTION UNLESS SPECIFICALLY MARKED "FOR CONSTRUCTION" PRIOR TO COMMENCEMENT OF CONSTRUCTION. THE CONTRACTOR SHALL VERIFY ALL DIMENSIONS AND CONDITIONS AFFECTING THE WORK WITH THE ACTUAL CONDITIONS AT THE JOB SITE. IN ADDITION, THE CONTRACTOR MUST VERIFY THE SURVEYOR'S LINE AND GRADE STAKES. IF THERE ARE ANY DISCREPANCIES WITH WHAT IS SHOWN ON THE CONSTRUCTION PLANS, HE/SHE MUST IMMEDIATELY REPORT THEM TO THE SURVEYOR OR ENGINEER BEFORE DOING ANY WORK. OTHERWISE, THE CONTRACTOR ASSUMES FULL RESPONSIBILITY. IN THE EVENT OF DISAGREEMENT BETWEEN THE CONSTRUCTION PLANS, SPECIFICATIONS, AND/OR SPECIAL DETAILS, THE CONTRACTOR SHALL SECURE WRITTEN INSTRUCTION FROM THE ENGINEER PRIOR TO PROCEEDING WITH ANY PART OF THE WORK AFFECTED BY OMISSIONS OR DISCREPANCIES. FAILING TO SECURE SUCH INSTRUCTION, THE CONTRACTOR WILL BE CONSIDERED TO HAVE PROCEEDED AT THE CONTRACTOR'S OWN RISK AND EXPENSE. IN THE EVENT OF ANY DOUBT OR QUESTIONS ARISING WITH RESPECT TO THE TRUE MEANING OF THE CONSTRUCTION PLANS OR SPECIFICATIONS, THE DECISION OF THE ENGINEER SHALL BE FINAL AND CONCLUSIVE.

5. NOTIFICATION OF COMMENCING CONSTRUCTION:

5.1. THE CONTRACTOR SHALL NOTIFY AFFECTED GOVERNMENTAL AGENCIES IN WRITING AT LEAST THREE (3) WORKING DAYS PRIOR TO COMMENCEMENT OF CONSTRUCTION. IN ADDITION, THE CONTRACTOR SHALL NOTIFY, AS NECESSARY, ALL TESTING AGENCIES, THE MUNICIPALITY, AND THE OWNER SUFFICIENTLY IN ADVANCE OF CONSTRUCTION.

5.2. FAILURE OF THE CONTRACTOR TO ALLOW PROPER NOTIFICATION TIME WHICH RESULTS IN THE TESTING COMPANIES TO BE UNABLE TO VISIT THE SITE AND PERFORM TESTING WILL CAUSE THE CONTRACTOR TO SUSPEND THE OPERATION TO BE TESTED UNTIL THE TESTING AGENCY CAN SCHEDULE TESTING OPERATIONS. COST OF SUSPENSION OF WORK SHALL BE BORNE BY THE CONTRACTOR.

6. ALL CONTRACTORS SHALL KEEP ACCESS AVAILABLE AT ALL TIMES FOR ALL EMERGENCY TRAFFIC, AS DIRECTED BY THE MUNICIPALITY.

7. ALL PROPOSED GRADES SHOWN ON PLANS ARE FINISHED SURFACE ELEVATIONS, UNLESS NOTED OTHERWISE.

8. THE CONTRACTOR SHALL PRESERVE ALL CONSTRUCTION STAKES UNTIL THEY ARE NO LONGER NEEDED. ANY STAKES DESTROYED OR DISTURBED BY THE CONTRACTOR PRIOR TO THEIR USE SHALL BE RESET BY THE SURVEYOR AT THE CONTRACTOR'S EXPENSE.

9. ALL FRAMES AND LIDS FOR STORM AND SANITARY SEWERS, VALVE VAULT COVERS, FIRE HYDRANTS, AND B-BOXES ARE TO BE ADJUSTED TO MEET FINISHED GRADE. THIS ADJUSTMENT IS TO BE MADE BY THE SEWER AND WATER CONTRACTOR, AND THE COST IS TO BE CONSIDERED INCIDENTAL. THESE ADJUSTMENTS TO FINISHED GRADE WILL NOT ALLEVIATE THE CONTRACTOR FROM ANY ADDITIONAL ADJUSTMENTS AS REQUIRED BY THE MUNICIPALITY UPON FINAL INSPECTION OF THE PROJECT. FINAL GRADES MAY BE DETERMINED BY THE MUNICIPALITY AND MAY VARY FROM PLAN GRADE.

10. ANY EXISTING SIGNS, LIGHT STANDARDS, AND UTILITY POLES THAT INTERFERE WITH CONSTRUCTION OPERATIONS AND ARE NOT NOTED ON THE PLANS FOR DISPOSAL SHALL BE REMOVED AND RESET BY THE CONTRACTOR AT HIS/HER OWN EXPENSE, AS DIRECTED BY THE ENGINEER. ANY DAMAGE TO THESE ITEMS SHALL BE REPAIRED OR REPLACED BY THE CONTRACTOR AT HIS/HER OWN EXPENSE TO THE SATISFACTION OF THE OWNER. ANY SIGNS NOT REQUIRED TO BE RESET SHALL BE DELIVERED TO THE RESPECTIVE OWNERS.

11. REMOVAL OF SPECIFIED ITEMS, INCLUDING BUT NOT LIMITED TO, PAVEMENT, SIDEWALK, CURB, CURB AND GUTTER, CULVERTS, ETC., SHALL BE DISPOSED OF OFF-SITE BY THE CONTRACTOR AT THE CONTRACTOR'S OWN EXPENSE. THE CONTRACTOR IS RESPONSIBLE FOR ANY PERMITS REQUIRED FOR SUCH DISPOSAL.

12. ANY FIELD TILES ENCOUNTERED SHALL BE INSPECTED BY THE MUNICIPALITY. THE DRAIN TILE SHALL BE CONNECTED TO THE STORM SEWER SYSTEM AND A RECORD KEPT BY THE CONTRACTOR OF THE LOCATIONS AND TURNED OVER TO THE MUNICIPALITY UPON COMPLETION OF THE PROJECT. THE COST OF THIS WORK SHALL BE CONSIDERED INCIDENTAL TO THE CONTRACT, AND NO ADDITIONAL COMPENSATION SHALL BE ALLOWED.

13. BEFORE ACCEPTANCE, ALL WORK SHALL BE INSPECTED BY THE MUNICIPALITY, AS NECESSARY.

14. EASEMENTS FOR THE EXISTING UTILITIES, BOTH PUBLIC AND PRIVATE, AND UTILITIES WITHIN PUBLIC RIGHT-OF-WAYS ARE SHOWN ON THE PLANS ACCORDING TO AVAILABLE RECORDS. THE CONTRACTOR SHALL BE RESPONSIBLE FOR DETERMINING THE EXACT LOCATION OF THESE UTILITY LINES AND THEIR PROTECTION FROM DAMAGE DUE TO CONSTRUCTION OPERATIONS. IF EXISTING UTILITY LINES OF ANY NATURE ARE ENCOUNTERED WHICH CONFLICT WITH LOCATIONS OF THE NEW CONSTRUCTION, THE CONTRACTOR SHALL NOTIFY THE ENGINEER SO THAT THE CONFLICT MAY BE RESOLVED.

15. OWNER SHALL OBTAIN EASEMENTS AND APPROVAL OF PERMITS NECESSARY TO FACILITATE CONSTRUCTION OF THE PROPOSED UTILITIES. THE CONTRACTOR, HOWEVER, SHALL FURNISH ALL REQUIRED BONDS AND EVIDENCE OF INSURANCE NECESSARY TO SECURE THESE PERMITS AND EASEMENTS.

16. THE CONTRACTORS SHALL PLAN THEIR WORK BASED ON THEIR OWN BORINGS, EXPLORATIONS, AND OBSERVATIONS TO DETERMINE SOIL CONDITIONS AT THE LOCATION OF THE PROPOSED WORK.

17. THE CONTRACTOR IS SOLELY RESPONSIBLE FOR SAFETY ON THE JOB PER OSHA REGULATIONS.

18. IT SHALL BE THE CONTRACTOR'S SOLE RESPONSIBILITY TO PROVIDE PROPER BARRICADING, WARNING DEVICES, AND THE SAFE MANAGEMENT OF TRAFFIC WITHIN THE AREA OF CONSTRUCTION. ALL SUCH DEVICES AND THEIR INSTALLATION SHALL CONFORM TO THE MANUAL OF UNIFORM TRAFFIC CONTROL DEVICES FOR STREET AND HIGHWAYS, LATEST EDITION, AND IN ACCORDANCE WITH THE MUNICIPAL ORDINANCES.

19. THE CONTRACTOR SHALL COLLECT AND REMOVE ALL CONSTRUCTION DEBRIS, EXCESS MATERIALS, TRASH, OIL AND GREASE RESIDUE, MACHINERY, TOOLS, AND OTHER MISCELLANEOUS ITEMS WHICH WERE NOT PRESENT PRIOR TO PROJECT COMMENCEMENT AT NO ADDITIONAL EXPENSE TO THE OWNER. THE CONTRACTOR SHALL BE RESPONSIBLE FOR ACQUIRING ANY AND ALL PERMITS NECESSARY FOR THE HAULING AND DISPOSAL REQUIRED FOR CLEANUP, AS DIRECTED BY THE ENGINEER OR OWNER. BURNING ON THE SITE IS NOT PERMITTED.

20. NO UNDERGROUND WORK SHALL BE COVERED UNTIL IT HAS BEEN APPROVED BY THE MUNICIPALITY. APPROVAL TO PROCEED MUST BE OBTAINED FROM THE MUNICIPALITY PRIOR TO INSTALLING PAVEMENT BASE, BINDER, AND SURFACE, AND PRIOR TO POURING ANY CONCRETE AFTER FORMS HAVE BEEN SET, AS NECESSARY.

21. ALL EXISTING UTILITIES OR IMPROVEMENTS, INCLUDING WALKS, CURBS, PAVEMENT, AND PARKWAYS DAMAGED OR REMOVED DURING CONSTRUCTION SHALL BE PROMPTLY RESTORED TO THEIR RESPECTIVE ORIGINAL CONDITION. THIS WORK SHALL BE CONSIDERED INCIDENTAL TO THE CONTRACT UNLESS A PAY ITEM IS LISTED ON THE BID LIST.

22. AT THE CLOSE OF EACH WORKING DAY AND AT THE CONCLUSION OF CONSTRUCTION OPERATIONS, ALL DRAINAGE STRUCTURES AND FLOW LINES SHALL BE FREE FROM DIRT AND DEBRIS.

23. TREES NOT MARKED FOR REMOVAL SHALL BE CONSIDERED AS DESIGNATED TO BE SAVED AND SHALL BE PROTECTED, AS PER MUNICIPAL STANDARDS.

24. LIMB PRUNING SHALL BE PERFORMED UNDER THE SUPERVISION OF AN APPROVED LANDSCAPE ARCHITECT, FORESTER, OR ARBORIST AND SHALL BE UNDERTAKEN IN A TIMELY FASHION SO AS NOT TO INTERFERE WITH CONSTRUCTION. ALL LIMBS, BRANCHES, AND OTHER DEBRIS RESULTING FROM THIS WORK SHALL BE DISPOSED OF OFF-SITE BY THE CONTRACTOR AT HIS/HER OWN EXPENSE. ALL CUTS OVER ONE (1) INCH IN DIAMETER SHALL BE PAINTED WITH AN APPROVED TREE PAINT.

25. WHERE SHOWN ON THE PLANS OR DIRECTED BY THE ENGINEER, EXISTING DRAINAGE STRUCTURES AND PIPE SHALL BE CLEANED OF DEBRIS AND PATCHED AS NECESSARY TO ASSURE INTEGRITY OF THE STRUCTURE. THIS WORK SHALL NOT BE PAID FOR SEPARATELY, BUT SHALL BE MERGED INTO THE CONTRACT UNIT PRICE EACH FOR STRUCTURES AND CONTRACT UNIT PRICE PER LINEAL FOOT FOR STORM SEWERS, WHICH SHALL BE PAYMENT IN FULL FOR CLEANING, PATCHING, REMOVAL, AND DISPOSAL OF DEBRIS AND DIRT. DRAINAGE STRUCTURES AND STORM SEWERS CONSTRUCTED AS PART OF THIS PROJECT SHALL BE MAINTAINED BY THE CONTRACTOR AT HIS EXPENSE. NO EXTRA PAYMENT WILL BE MADE FOR CLEANING STRUCTURES OR STORM SEWERS CONSTRUCTED AS PART OF THIS PROJECT.

26. HYDRANTS SHALL NOT BE FLUSHED DIRECTLY ONTO THE ROAD SUBGRADES. WHENEVER POSSIBLE, HOSES SHALL BE USED TO DIRECT THE WATER INTO LOT AREAS OR THE STORM SEWER SYSTEM. IF AVAILABLE. DAMAGE TO THE ROAD SUBGRADE OR LOT GRADING DUE TO EXCESSIVE WATER SATURATION AND/OR EROSION FROM HYDRANT FLUSHING, OR FROM LEAKS IN THE WATER DISTRIBUTION SYSTEM, WILL BE REPAIRED BY THE CONTRACTOR FLUSHING OR USING THE HYDRANT AT THE CONTRACTOR'S OWN EXPENSE. LEAKS IN THE WATER DISTRIBUTION SYSTEM SHALL BE THE RESPONSIBILITY OF THE WATER MAIN CONTRACTOR AND SHALL BE REPAIRED AT HIS EXPENSE.

27. AFTER THE STORM SEWER SYSTEM HAS BEEN CONSTRUCTED, THE CONTRACTOR SHALL PLACE EROSION CONTROL AT LOCATIONS INDICATED BY THE ENGINEER. THE PURPOSE OF THE EROSION CONTROL WILL BE TO MINIMIZE THE AMOUNT OF SILTATION THAT NORMALLY WOULD ENTER THE STORM SEWER SYSTEM FROM ADJACENT AND/OR UPSTREAM DRAINAGE AREAS.

28. THE TRENCHES FOR PIPE INSTALLATION SHALL BE KEPT DRY AT ALL TIMES DURING PIPE PLACEMENT. APPROPRIATE FACILITIES TO MAINTAIN THE DRY TRENCH SHALL BE PROVIDED BY THE CONTRACTOR, AND THE COST OF SUCH SHALL BE INCIDENTAL TO THE UNIT PRICE BID FOR THE ITEM. PLANS FOR THE SITE DEWATERING, IF EMPLOYED, SHALL BE SUBMITTED TO AND APPROVED BY THE ENGINEER PRIOR TO IMPLEMENTATION. NO ADDITIONAL COMPENSATION SHALL BE MADE FOR DEWATERING DURING CONSTRUCTION UNLESS APPROVED IN WRITING BY THE OWNER.

29. EROSION CONTROL MEASURES SHALL BE INSTALLED IN ACCORDANCE WITH IDEM REGULATIONS AND STANDARDS FOR SOIL EROSION AND SEDIMENTATION CONTROL AND SHALL BE MAINTAINED BY THE CONTRACTOR AND REMAIN IN PLACE UNTIL A SUITABLE GROWTH OF GRASS, ACCEPTABLE TO THE ENGINEER, HAS DEVELOPED.

30. THE CONTRACTOR IS SOLELY RESPONSIBLE FOR DETAILED PHASING AND CONSTRUCTION SEQUENCING NECESSARY TO CONSTRUCT THE PROPOSED IMPROVEMENTS INCLUDED IN THESE PLANS. THE CONTRACTOR SHALL NOTIFY ENGINEER IN WRITING IMMEDIATELY, PRIOR TO AND/OR

EROSION CONTROL NOTES

1. CONSTRUCTION ENTRANCE SHALL BE LOCATED SO AS TO PROVIDE THE LEAST AMOUNT OF DISTURBANCE TO THE FLOW OF TRAFFIC IN AND OUT OF THE SITE. ADDITIONALLY, CONSTRUCTION ENTRANCE SHALL BE LOCATED TO COINCIDE WITH THE PHASING OF THE PAVEMENT REPLACEMENT.

2. POST CONSTRUCTION STORM WATER POLLUTION CONTROL MEASURES INCLUDE STABILIZATION BY PERMANENT PAVING, DRAINAGE SYSTEM STRUCTURE, OR LANDSCAPING.

3. TEMPORARY AND PERMANENT STABILIZATION PRACTICES AND BMP'S SHALL BE INSTALLED AT THE EARLIEST POSSIBLE TIME DURING THE CONSTRUCTION SEQUENCE. AS AN EXAMPLE, PERIMETER SILT FENCE SHALL BE INSTALLED BEFORE COMMENCEMENT OF ANY GRADING ACTIVITIES. OTHER BMP'S SHALL BE INSTALLED AS SOON AS PRACTICABLE AND SHALL BE MAINTAINED UNTIL FINAL SITE STABILIZATION IS ATTAINED. CONTRACTOR SHALL ALSO REFERENCE CIVIL AND LANDSCAPE PLANS SINCE PERMANENT STABILIZATION IS PROVIDED BY LANDSCAPING, THE BUILDING(S), AND SITE PAVING.

4. BMP'S HAVE BEEN LOCATED AS INDICATED IN THESE PLANS IN ACCORDANCE WITH GENERALLY ACCEPTED ENGINEERING PRACTICES IN ORDER TO MINIMIZE SEDIMENT TRANSFER. FOR EXAMPLE: SILT FENCES LOCATED AT TOE OF SLOPE AND INLET PROTECTION FOR INLETS RECEIVING SEDIMENT FROM SITE RUN-OFF

DEMOLITION NOTES

1. THE INTENT OF THE DEMOLITION PLAN IS TO DEPICT EXISTING FEATURES THAT ENCUMBER THE PROPOSED CONSTRUCTION AREA AND ARE SCHEDULED FOR REMOVAL. SOME INCIDENTAL ITEMS MAY HAVE BEEN INADVERTENTLY OMITTED FROM THE PLAN. THE CONTRACTOR IS ENCOURAGED TO THOROUGHLY INSPECT THE SITE AS WELL AS REVIEW THE PLANS AND SPECIFICATIONS PRIOR TO SUBMITTING PRICING. CONTRACTOR WILL NOT RECEIVE ADDITIONAL COMPENSATION FOR INCIDENTAL ITEMS NOT SHOWN ON THE DEMOLITION PLAN.

2. THE LOCATIONS OF EXISTING UTILITIES SHOWN ON THIS PLAN HAVE BEEN DETERMINED FROM THE BEST INFORMATION AVAILABLE AND ARE GIVEN FOR THE CONVENIENCE OF THE CONTRACTOR. THE ENGINEER ASSUMES NO RESPONSIBILITY FOR THEIR ACCURACY. PRIOR TO COMMENCING ANY DEMOLITION ACTIVITY, THE CONTRACTOR SHALL NOTIFY THE UTILITY COMPANIES TO HAVE ON-SITE LOCATIONS OF EXISTING UTILITIES AND FIELD VERIFY ALL UNDERGROUND UTILITIES.

3. THE CONTRACTOR SHALL MAINTAIN ALL UTILITY SERVICES TO THE EXISTING BUILDING AT ALL TIMES. UTILITY SERVICES SHALL NOT BE INTERRUPTED WITHOUT APPROVAL FROM THE CONSTRUCTION MANAGER.

4. CONTRACTOR IS REQUIRED TO OBTAIN ALL NECESSARY DEMOLITION PERMITS.

5. THE CONTINUOUS ACCESS SHALL BE MAINTAINED FOR THE TRUCKS AT ALL TIMES DURING DEMOLITION OF THE EXISTING FACILITIES.

6. CONTRACTOR MAY LIMIT SAW-CUT AND PAVEMENT REMOVAL TO ONLY THOSE AREAS WHERE IT IS REQUIRED AS SHOWN ON THESE CONSTRUCTION PLANS BUT IF ANY DAMAGE IS INCURRED ON ANY OF THE SURROUNDING PAVEMENT, ETC., THE CONTRACTOR SHALL BE RESPONSIBLE FOR ITS REMOVAL AND REPAIR.

7. THE CONTRACTOR SHALL COORDINATE WITH RESPECTIVE UTILITY COMPANIES PRIOR TO THE REMOVAL AND/OR RELOCATION OF UTILITIES OR PRIOR TO ANY FURTHER DEMOLITION. THE CONTRACTOR SHALL COORDINATE WITH THE UTILITY COMPANY CONCERNING PORTIONS OF WORK WHICH MAY BE PERFORMED BY THE UTILITY COMPANY'S FORCES AND ANY FEES WHICH ARE TO BE PAID TO THE UTILITY COMPANY FOR THEIR SERVICES. THE CONTRACTOR IS RESPONSIBLE FOR PAYING ALL FEES AND CHARGES.

8. THE CONTRACTOR SHALL USE DUE CARE IN HAULING DEBRIS FROM SITE TO ENSURE THE SAFETY OF THE PUBLIC.

9. DAMAGE TO ALL EXISTING CONDITIONS TO REMAIN WILL BE REPLACED AT CONTRACTOR'S EXPENSE.

10. CONTRACTOR SHALL LIMIT ALL DEMOLITION ACTIVITIES TO THOSE AREAS DELINEATED ON THE CONSTRUCTION DRAWINGS UNLESS OTHERWISE DIRECTED BY THE CONSTRUCTION MANAGER.

11. CONTRACTOR IS RESPONSIBLE FOR CONTROLLING AIRBORNE DUST AND POLLUTANTS BY USING WATER SPRINKLING OR OTHER SUITABLE MEANS OF CONTROL.

12. CONTRACTOR TO USE CARE IN HANDLING DEBRIS FROM SITE TO ENSURE THE SAFETY OF THE PUBLIC. HAUL ROUTE TO BE CLOSELY MONITORED FOR DEBRIS OR MATERIALS TRACKED ONTO ADJOINING ROADWAYS, ETC. ROADWAYS AND WALKWAYS TO BE CLEARED DAILY OR AS NECESSARY TO MAINTAIN PUBLIC SAFETY.

13. DEWATERING SHOULD BE ANTICIPATED AND INCLUDED. DEWATERING SHALL BE DONE IN ACCORDANCE WITH LOCAL AND REGIONAL REQUIREMENTS.

EARTHWORK NOTES

1. GENERAL

1.1. ALL EARTHWORK OPERATIONS TO CONFORM TO GEOTECHNICAL RECOMMENDATIONS IN THE GEOTECHNICAL REPORT.

1.2. IT IS THE CONTRACTOR'S RESPONSIBILITY TO UNDERSTAND THE SOIL AND GROUNDWATER CONDITIONS AT THE SITE.

1.3. ANY QUANTITIES IN THE BID PROPOSAL ARE INTENDED AS A GUIDE FOR THE CONTRACTOR'S USE IN DETERMINING THE SCOPE OF THE COMPLETED PROJECT. IT IS THE CONTRACTOR'S RESPONSIBILITY TO DETERMINE ALL MATERIAL QUANTITIES AND APPRISE HIMSELF/HERSELF OF ALL SITE CONDITIONS. THE CONTRACT PRICE SUBMITTED BY THE CONTRACTOR SHALL BE CONSIDERED AS LUMP SUM FOR THE COMPLETE PROJECT. NO CLAIMS FOR EXTRA WORK WILL BE RECOGNIZED.

1.4. THE CONTRACTOR WILL NOTE THAT THE ELEVATIONS SHOWN ON THE CONSTRUCTION PLANS ARE FINISHED GRADE AND SUBGRADE ELEVATIONS (AS NOTED) AND THAT PAVEMENT THICKNESS, TOPSOIL, ETC., MUST BE ACCOUNTED FOR.

1.5. THE CONTRACTOR SHALL MAINTAIN POSITIVE DRAINAGE DURING CONSTRUCTION AND PREVENT STORMWATER FROM RUNNING INTO OR STANDING IN EXCAVATED AREAS. THE FAILURE TO PROVIDE PROPER DRAINAGE WILL NEGATE ANY POSSIBLE ADDED COMPENSATION REQUESTED DUE TO DELAYS OR UNSUITABLE MATERIALS CREATED AS A RESULT THEREOF. FINAL GRADES SHALL BE PROTECTED AGAINST DAMAGE FROM EROSION, SEDIMENTATION, AND TRAFFIC.

1.6. PLANS FOR THE SITE DEWATERING, IF EMPLOYED, SHALL BE SUBMITTED AND APPROVED PRIOR TO IMPLEMENTATION. NO ADDITIONAL COMPENSATION SHALL BE MADE FOR DEWATERING DURING CONSTRUCTION.

1.7. THE CONTRACTOR SHALL BE RESPONSIBLE FOR IMPLEMENTATION OF THE SOIL EROSION AND SEDIMENTATION CONTROL MEASURES. THE INITIAL ESTABLISHMENT OF EROSION CONTROL PROCEDURES AND THE PLACEMENT OF SILT AND FILTER FENCING, ETC., TO PROTECT ADJACENT PROPERTY, ETC., SHALL OCCUR BEFORE GRADING BEGINS.

1.8. PRIOR TO COMMENCEMENT OF GRADING ACTIVITIES, THE CONTRACTOR SHALL ERECT A CONSTRUCTION FENCE AROUND ANY TREE DESIGNATED TO BE PRESERVED. SAID FENCE SHALL BE PLACED IN A CIRCLE CENTERED AROUND THE TREE, THE DIAMETER OF WHICH SHALL BE SUCH THAT THE ENTIRE DRIP ZONE (EXTENT OF FURTHEST EXTENDING BRANCHES) SHALL BE WITHIN THE FENCE LIMITS. THE EXISTING GRADE WITHIN THE FENCED AREA SHALL NOT BE DISTURBED.

1.9. IF LANDSCAPE PLANTINGS ARE WITHIN OR ADJACENT TO AREAS WHERE LIME STABILIZATION OCCURS, CONTRACTOR SHALL FULLY REMOVE SOIL CONTAINING LIME STABILIZATION AND REPLACE WITH HIGH QUALITY PLANTING SOIL.

2. TOPSOIL EXCAVATION INCLUDES:

2.1. EXCAVATION OF TOPSOIL AND OTHER STRUCTURALLY UNSUITABLE MATERIALS WITHIN THOSE AREAS THAT WILL REQUIRE EARTH EXCAVATION OR COMPACTED EARTH FILL MATERIAL. EXISTING VEGETATION SHALL BE REMOVED PRIOR TO STRIPPING TOPSOIL OR FILLING AREAS.

2.2. PLACEMENT OF EXCAVATED MATERIAL IN OWNER-DESIGNATED AREAS FOR FUTURE USE WITHIN AREAS TO BE LANDSCAPED AND THOSE AREAS NOT REQUIRING STRUCTURAL FILL MATERIAL. PROVIDE NECESSARY EROSION CONTROL MEASURES FOR STOCKPILE.

2.3. TOPSOIL STOCKPILED FOR RESPREAD SHALL BE FREE OF CLAY AND SHALL NOT CONTAIN ANY OF THE TRANSITIONAL MATERIAL BETWEEN THE TOPSOIL AND CLAY. THE TRANSITIONAL MATERIAL SHALL BE USED IN NON-STRUCTURAL FILL AREAS OR DISPOSED OF OFF-SITE.

2.4. TOPSOIL RESPREAD SHALL INCLUDE HAULING AND SPREADING OF TOPSOIL DIRECTLY OVER AREAS TO BE LANDSCAPED WHERE SHOWN ON THE PLANS OR AS DIRECTED BY THE OWNER.

3. EARTH EXCAVATION INCLUDES:

3.1. EXCAVATION OF SUBSURFACE MATERIALS WHICH ARE SUITABLE FOR USE AS STRUCTURAL FILL. THE EXCAVATION SHALL BE TO WITHIN A TOLERANCE OF 0.1 FEET OF THE PLAN SUBGRADE ELEVATIONS WHILE MAINTAINING PROPER DRAINAGE. THE TOLERANCE WITHIN PAVEMENT AREAS SHALL BE SUCH THAT THE EARTH MATERIALS SHALL "BALANCE" DURING THE FINE GRADING OPERATION.

3.2. PLACEMENT OF SUITABLE MATERIALS SHALL BE WITHIN THOSE AREAS REQUIRING STRUCTURAL FILL IN ORDER TO ACHIEVE THE PLAN SUBGRADE ELEVATIONS TO WITHIN A TOLERANCE OF 0.1 FEET. THE FILL MATERIALS SHALL BE PLACED IN LOOSE LIFTS THAT SHALL NOT EXCEED EIGHT (8) INCHES IN THICKNESS, AND THE WATER CONTENT SHALL BE ADJUSTED IN ORDER TO ACHIEVE REQUIRED COMPACTION.

3.3. STRUCTURAL FILL MATERIAL MAY BE PLACED WITHIN THOSE PORTIONS OF THE SITE NOT REQUIRING STRUCTURAL FILL, WITHIN SIX (6) INCHES OF THE PLAN FINISHED GRADE ELEVATION. IN AREAS REQUIRING STRUCTURAL FILL, HOWEVER, THIS MATERIAL SHALL NOT BE PLACED OVER TOPSOIL OR OTHER UNSUITABLE MATERIALS UNLESS SPECIFICALLY DIRECTED BY A SOILS ENGINEER WITH THE CONCURRENCE OF THE OWNER.

3.4. COMPACTION OF SUITABLE MATERIALS SHALL BE TO AT LEAST 93% OF THE MODIFIED PROCTOR DRY DENSITY WITHIN PROPOSED PAVEMENT AREAS, SIDEWALK, ETC. COMPACTION SHALL BE AT LEAST 95% OF THE MODIFIED PROCTOR WITHIN PROPOSED BUILDING PAD AREAS OR AS RECOMMENDED BY THE GEOTECHNICAL REPORT.

4. UNSUITABLE MATERIAL: UNSUITABLE MATERIALS SHALL BE CONSIDERED MATERIAL THAT IS NOT SUITABLE FOR THE SUPPORT OF PAVEMENT AND BUILDING CONSTRUCTION, AND IS ENCOUNTERED BELOW NORMAL TOPSOIL DEPTHS AND THE PROPOSED SUBGRADE ELEVATION. THE DECISION TO REMOVE SAID MATERIAL AND TO WHAT EXTENT SHALL BE MADE BY THE GEOTECHNICAL ENGINEER OR SOILS TESTING AGENCY WITH THE CONCURRENCE OF THE OWNER.

5. MISCELLANEOUS. THE CONTRACTOR SHALL:

5.1. SPREAD AND COMPACT UNIFORMLY TO THE DEGREE SPECIFIED ALL EXCESS TRENCH SPOIL AFTER COMPLETION OF THE UNDERGROUND IMPROVEMENTS.

5.2. SCARIFY, DISC, AERATE, AND COMPACT, TO THE DEGREE SPECIFIED, THE UPPER TWELVE (12) INCHES OF THE SUITABLE SUBGRADE MATERIAL IN ALL AREAS THAT MAY BE SOFT DUE TO EXCESS MOISTURE CONTENT. THIS APPLIES TO CUT AREAS AS WELL AS FILL AREAS.

5.3. PROVIDE WATER TO ADD TO DRY MATERIAL IN ORDER TO ADJUST THE MOISTURE CONTENT FOR THE PURPOSE OF ACHIEVING THE SPECIFIED COMPACTION.

5.4. BACKFILL THE CURB AND GUTTER AFTER ITS CONSTRUCTION AND PRIOR TO THE PLACEMENT OF THE BASE COURSE MATERIAL.

6. TESTING AND FINAL ACCEPTANCE

6.1. THE CONTRACTOR SHALL PROVIDE AS A MINIMUM A FULLY LOADED SIX-WHEEL TANDEM AXLE TRUCK FOR PROOF ROLLING THE PAVEMENT SUBGRADE PRIOR TO THE PLACEMENT OF THE CURB AND GUTTER AND THE BASE MATERIAL. THIS SHALL BE WITNESSED BY THE GEOTECHNICAL ENGINEER OR SOILS TESTING AGENCY AND THE OWNER. (SEE PAVING SPECIFICATION.)

6.2. ANY UNSUITABLE AREA ENCOUNTERED AS A RESULT OF PROOF ROLLING SHALL BE REMOVED AND REPLACED WITH SUITABLE MATERIAL OR OTHERWISE CORRECTED AND APPROVED BY THE GEOTECHNICAL ENGINEER OR SOILS TESTING AGENCY.

PAVING NOTES

1. GENERAL

1.1. PAVING WORK INCLUDES FINAL SUBGRADE SHAPING, PREPARATION, AND COMPACTION; PLACEMENT OF SUBBASE OR BASE COURSE MATERIALS; BITUMINOUS INTERMEDIATE AND/OR SURFACE COURSES; FORMING, FINISHING, AND CURING CONCRETE PAVEMENT, CURBS, AND WALKS; AND FINAL CLEAN-UP AND ALL RELATED WORK.

2. SUBGRADE PREPARATION

2.1. EARTHWORK FOR PROPOSED PAVEMENT SUBGRADE SHALL BE FINISHED TO WITHIN 0.1 FOOT, PLUS OR MINUS, OF PLAN ELEVATION. THE CONTRACTOR SHALL SATISFY HIMSELF THAT THE SUBGRADE HAS BEEN PROPERLY PREPARED AND THAT THE FINISH TOP SUBGRADE ELEVATION HAS BEEN GRADED WITHIN TOLERANCES ALLOWED IN THESE SPECIFICATIONS, UNLESS THE CONTRACTOR ADVISES THE ENGINEER IN WRITING PRIOR TO FINE GRADING FOR BASE COURSE CONSTRUCTION. IT IS UNDERSTOOD THAT HE/SHE HAS APPROVED AND ACCEPTS THE RESPONSIBILITY FOR THE SUBGRADE.

2.2. AFTER STRIPPING TO THE PROPOSED SUBGRADE LEVEL, THE BUILDING AND PARKING AREA SHOULD BE PROOF-ROLLED WITH A TANDEM AXLE DUMP TRUCK OR SIMILAR HEAVY RUBBER TIRED VEHICLE TRAVELLING WITH AN AXIAL LOAD GREATER THAN NINE (9) TONS OR MEETING SPECIFICATIONS OUTLINED IN INDOT CMS ITEM 204 FOR ROADWAY SUBGRADE COMPACTION AND PROOF-ROLLING.

2.3. MAXIMUM DEFLECTION ALLOWED IN ISOLATED AREAS MAY BE ONE (1) INCH IF NO DEFLECTION OCCURS OVER THE MAJORITY OF THE AREA.

2.4. PRIOR TO THE CONSTRUCTION OF THE CURB AND GUTTER AND THE PLACEMENT OF THE BASE MATERIAL, THE PAVEMENT AREA SHALL BE FINE-GRADED TO WITHIN 0.04 FEET (1/2 INCH) OF FINAL SUBGRADE ELEVATION, TO A POINT TWO (2) FEET BEYOND THE BACK OF THE CURB, SO AS TO ENSURE THE PROPER THICKNESS OF PAVEMENT COURSES. NO CLAIMS FOR EXCESS QUANTITY OF BASE MATERIALS DUE TO IMPROPER SUBGRADE PREPARATION WILL BE HONORED.

2.5. PRIOR TO PLACEMENT OF THE BASE COURSE, THE SUBGRADE SHALL BE APPROVED BY THE TESTING ENGINEER.

3. CONCRETE WORK

3.1. ALL EXTERIOR CONCRETE SHALL BE PORTLAND CEMENT CONCRETE CLASS S1 OR PV. CONCRETE SHALL BE A MINIMUM OF SIX (6) BAG MIX AND SHALL DEVELOP A MINIMUM OF 4,000 PSI COMPRESSIVE STRENGTH IN TWENTY-EIGHT (28) DAYS. ALL CONCRETE SHALL BE BROOM-FINISHED PERPENDICULAR TO THE DIRECTION OF TRAVEL.

3.2. CONCRETE CURB AND/OR COMBINATION CURB AND GUTTER SHALL BE OF THE TYPE SHOWN ON THE PLANS. THE CONTRACTOR IS CAUTIONED TO REFER TO THE CONSTRUCTION STANDARDS AND THE PAVEMENT CROSS SECTION TO DETERMINE THE GUTTER FLAG THICKNESS AND THE AGGREGATE BASE COURSE THICKNESS BENEATH THE CURB AND GUTTER.
PRE-MOLDED FIBER EXPANSION JOINTS, WITH TWO 3/4-INCH BY 18-INCH EPOXY-COATED STEEL DOWEL BARS, SHALL BE GREASED AND FITTED WITH METAL EXPANSION TUBES. SAWED OR FORMED CONTRACTION JOINTS SHALL BE PROVIDED AT NO GREATER THAN TEN TO TWENTY-FIVE FOOT INTERVALS BETWEEN EXPANSION JOINTS. NO HONEY-COMBING OF THE CURB AND GUTTER WILL BE ACCEPTED.

3.3. CURBS SHALL BE DEPRESSED AT LOCATIONS WHERE PUBLIC WALKS INTERSECT CURB LINES AND OTHER LOCATIONS

DEMOLITION NOTES

GENERAL DEMOLITION NOTES

1. CONTRACTOR SHALL BE RESPONSIBLE FOR REMOVAL OF THE EXISTING STRUCTURES, RELATED UTILITIES, PAVING, AND ANY OTHER EXISTING IMPROVEMENTS AS NOTED.
2. CONTRACTOR IS TO REMOVE AND DISPOSE OF ALL DEBRIS, RUBBISH AND OTHER MATERIALS RESULTING FROM PREVIOUS AND CURRENT DEMOLITION OPERATIONS. DISPOSAL WILL BE IN ACCORDANCE WITH ALL LOCAL, STATE AND/OR FEDERAL REGULATIONS GOVERNING SUCH OPERATIONS.
3. THE GENERAL CONTRACTOR SHALL TAKE ALL PRECAUTIONS NECESSARY TO AVOID PROPERTY DAMAGE TO ADJACENT PROPERTIES DURING THE CONSTRUCTION PHASES OF THIS PROJECT. THE CONTRACTOR WILL BE HELD SOLELY RESPONSIBLE FOR ANY DAMAGES TO THE ADJACENT PROPERTIES OCCURRING DURING THE CONSTRUCTION PHASES OF THIS PROJECT.
4. THE CONTRACTOR IS SPECIFICALLY CAUTIONED THAT THE LOCATION AND/OR ELEVATION OF EXISTING UTILITIES AS SHOWN ON THESE PLANS IS BASED ON RECORDS OF THE VARIOUS UTILITY COMPANIES, AND WHERE POSSIBLE, MEASUREMENTS TAKEN IN THE FIELD. THE INFORMATION IS NOT TO BE RELIED UPON AS BEING EXACT OR COMPLETE. THE CONTRACTOR MUST CALL THE APPROPRIATE UTILITY COMPANY AT LEAST 72 HOURS BEFORE ANY EXCAVATION TO REQUEST EXACT FIELD LOCATION OF UTILITIES.
5. IF DEMOLITION OR CONSTRUCTION ON SITE WILL INTERFERE WITH THE ADJACENT PROPERTY OWNER'S TRAFFIC FLOW, THE CONTRACTOR SHALL COORDINATE WITH ADJACENT PROPERTY OWNER, TO MINIMIZE THE IMPACT ON TRAFFIC FLOW. TEMPORARY RE-ROUTING OF TRAFFIC IS TO BE ACCOMPLISHED BY USING INDOT APPROVED TRAFFIC BARRICADES, BARRELS, AND/OR CONES. TEMPORARY SIGNAGE AND FLAGMEN MAY BE ALSO NECESSARY.
6. CONTRACTOR SHALL NOT DEMOLISH ANYTHING OUTSIDE THE OWNERS LEASE/PROPERTY LINE UNLESS SPECIFICALLY MENTIONED ON THIS SHEET.
7. QUANTITIES DEPICTED ON THIS SHEET SHALL SERVE AS A GUIDE ONLY. CONTRACTOR TO VERIFY ALL DEMOLITION QUANTITIES.
8. PRIOR TO BIDDING AND CONSTRUCTION, CONTRACTOR TO REFER TO OWNER PROVIDED PHASE I ENVIRONMENTAL SITE ASSESSMENT AND ASBESTOS REPORT FOR SITE SPECIFIC CONDITIONS AND CONSIDERATIONS.
9. CONTRACTOR SHALL BEGIN CONSTRUCTION OF ANY LIGHT POLE BASES FOR RELOCATED LIGHT FIXTURES AND RELOCATION OF ELECTRICAL SYSTEM AS SOON AS DEMOLITION BEGINS. CONTRACTOR SHALL BE AWARE THAT INTERRUPTION OF POWER TO ANY LIGHT POLES OR SIGNS SHALL NOT EXCEED 24 HOURS
10. EROSION CONTROL MUST BE ESTABLISHED PRIOR TO ANY WORK ON SITE INCLUDING DEMOLITION. REFER TO THE EROSION CONTROL SHEET.
11. REFER TO GEOTECHNICAL REPORT PROVIDED BY OTHERS FOR ALL SUBSURFACE INFORMATION.

DEMOLITION NOTES

THE EXTENT OF SITE DEMOLITION WORK IS AS SHOWN ON THE CONTRACT DOCUMENTS AND AS SPECIFIED HEREIN. SEE ARCHITECTURAL DRAWNGS FOR LIMITS AND PROPER DEMOLITION OF EXISTING BUILDING. FURNISH ALL LABOR, MATERIALS, EQUIPMENT AND SERVICE NECESSARY TO COMPLETE THE WORK. DEMOLITION INCLUDES, BUT IS NOT LIMITED TO, REMOVAL AND DISPOSAL OFFSITE OF THE FOLLOWING ITEMS:

- SIDEWALK AND ON-SITE PAVEMENT
- BUILDINGS, FOUNDATIONS, AND SUPPORTING WALLS AND SLABS
- DEBRIS AND FOUNDATIONS FROM ALL DEMOLISHED STRUCTURES
- ALL PAVEMENT TO BE REMOVED ADJACENT TO PAVEMENT THAT IS TO REMAIN SHALL BE SAWCUT FULL DEPTH AT THE EDGES PRIOR TO REMVAL TO OBTAIN A "CLEAN" JOINT WHERE IT ABUTS NEW CURB OR PAVEMENT.

CONTRACTOR MUST RECEIVE APPROVAL FROM CIVIL ENGINEER AND GEOTECHNICAL ENGINEER FOR THE MATERIAL TYPE AND USE IF CONTRACTOR DESIRES TO REUSE DEMOLISHED SITE PAVEMENT AS STRUCTURAL FILL.

DISPOSAL OF DEMOLISHED MATERIALS

REMOVE FROM SITE DEBRIS, RUBBISH AND OTHER MATERIALS RESULTING FROM DEMOLITION OPERATIONS. BURNING OF REMOVED MATERIALS FROM DEMOLISHED STRUCTURES WILL NOT BE PERMITTED ON SITE. TRANSPORT MATERIALS REMOVED FROM DEMOLISHED STRUCTURES AND DISPOSE OF OFF SITE IN A LEGAL MANNER.

LANDSCAPE PROTECTION AND REMOVAL

SEE LANDSCAPE PLANS FOR INFORMATION ON LANDSCAPE AND TREE PROTECTION, PRESERVATION AND REMOVAL.

UTILITY SERVICES

EXISTING UTILITIES, WHICH DO NOT SERVICE STRUCTURES BEING DEMOLISHED, ARE TO BE KEPT IN SERVICE AND PROTECTED AGAINST DAMAGE DURING DEMOLITION OPERATIONS. CONTRACTOR SHALL ARRANGE FOR SHUT-OFF OF UTILITIES SERVING STRUCTURES TO BE DEMOLISHED. CONTRACTOR IS RESPONSIBLE FOR TURNING OFF, DISCONNECTING, AND SEALING INDICATED UTILITIES BEFORE STARTING DEMOLITION OPERATIONS. EXISTING UTILITIES TO BE ABANDONED ARE TO BE CAPPED AT BOTH ENDS AND FILLED WITH FLOWABLE FILL OR APPROVED EQUAL. ALL UNDERGROUND UTILITIES TO BE REMOVED ARE TO BE BACKFILLED WITH ENGINEERED FILL OR SELECT EXCAVATED MATERIAL, AS APPROVED BY THE GEOTECHNICAL ENGINEER, TO 95% OF MODIFIED PROCTOR DENSITY WITHIN PAVED AREAS AND TO 90% OF MODIFIED PROCTOR DENSITY FOR GREEN SPACE AREAS, IN ACCORDANCE WITH THE EARTHWORK SPECIFICATIONS. ALL PRIVATE UTILITIES (ELECTRIC, CABLE, TELEPHONE, FIBER OPTIC, GAS) SHALL BE REMOVED AND RELOCATED PER THE UTILITY OWNER AND THE LOCAL MUNICIPALITY'S REQUIREMENTS.

UTILITY PROTECTION

UNDERGROUND UTILITIES SHOWN ARE BASED ON ATLASES AND AVAILABLE INFORMATION PRESENTED AT THE TIME OF SURVEY. CONTRACTOR SHOULD CALL INDIANA 811 (811 OR 800-382-5544) TO COORDINATE FIELD LOCATIONS OF EXISTING UNDERGROUND UTILITIES BEFORE ORDERING MATERIALS OR COMMENCING CONSTRUCTION. NOTIFY ENGINEER OF ANY DISCREPANCIES IMMEDIATELY. CONTRACTOR SHALL LOCATE AND PROTECT EXISTING UNDERGROUND AND OVERHEAD UTILITIES DURING CONSTRUCTION. UTILITY PROTECTION SHALL BE COORDINATED WITH THE RESPECTIVE UTILITY OWNER AND AS DIRECTED BY THE GOVERNING MUNICIPALITY. DAMAGED CABLES/CONDUITS SHALL BE REPLACED IMMEDIATELY. ALL EXISTING STRUCTURES TO REMAIN SHALL BE PROTECTED THROUGHOUT THE CONSTRUCTION PROCESS. ALL DAMAGED STRUCTURES SHALL BE REPLACED IN-KIND AND THEIR REPLACEMENT COST SHALL BE CONSIDERED INCIDENTAL TO THE CONTRACT. PROPER NOTIFICATION TO THE OWNERS OF THE EXISTING UTILITIES SHALL BE MADE AT LEAST 48 HOURS BEFORE CONSTRUCTION COMMENCES.

POLLUTION CONTROLS

USE WATER SPRINKLING, TEMPORARY ENCLOSURES, AND OTHER SUITABLE METHODS TO LIMIT DUST AND DIRT RISING AND SCATTERING IN THE AIR TO THE LOWEST LEVEL. COMPLY WITH ALL GOVERNING REGULATIONS PERTAINING TO ENVIRONMENTAL PROTECTION. SEE EROSION CONTROL SHEETS FOR FURTHER EROSION CONTROL REQUIREMENTS.

FILLING BASEMENTS AND VOIDS

COMPLETELY FILL BELOW-GRADE AREAS AND VOIDS RESULTING FROM DEMOLITION OF STRUCTURES TO THE FINAL LINES AND GRADES SHOWN ON THE CONTRACT DOCUMENTS. BACKFILL MATERIAL SHALL BE INDOT APPROVED CRUSHED LIMESTONE OR APPROVED EQUAL. USE SATISFACTORY SOIL MATERIALS CONSISTING OF STONE, GRAVEL AND SAND, FREE FROM DEBRIS, TRASH, FROZEN MATERIALS, ROOTS AND OTHER ORGANIC MATTER. PRIOR TO PLACEMENT OF FILL MATERIALS, ENSURE THAT AREAS TO BE FILLED ARE FREE OF STANDING WATER, FROST, FROZEN MATERIAL, TRASH AND DEBRIS. PLACE FILL MATERIALS IN HORIZONTAL LAYERS NOT EXCEEDING 9" IN LOOSE DEPTH. COMPACT EACH LAYER AT OPTIMUM MOISTURE CONTENT OF FILL MATERIAL TO 95% OF MODIFIED PROCTOR DENSITY UNLESS SUBSEQUENT EXCAVATION FOR NEW WORK IS REQUIRED.

SITE NOTES

1. ALL DIMENSIONS REFER TO THE FACE OF CURB UNLESS OTHERWISE NOTED.
2. BUILDING DIMENSIONS ARE TO THE OUTSIDE FACE OF BUILDING UNLESS OTHERWISE NOTED.
3. REFER TO ARCHITECTURAL AND STRUCTURAL PLANS TO VERIFY ALL BUILDING DIMENSIONS, DOOR LOCATIONS, PRIOR TO ORDERING MATERIALS.
4. RADII ADJACENT TO PARKING STALL AND NOT DIMENSIONED ON THIS PLAN SHALL BE 3-FEET, TYPICAL.
5. REFER TO ARCHITECTURAL PLANS FOR MONUMENT SIGN DETAILS. SEE MEP PLANS FOR SITE ELECTRICAL DRAWNGS.
6. ALL PROPOSED ON-SITE STRIPING SHALL BE PAINTED UNLESS OTHERWISE NOTED.

TEMPORARY EROSION CONTROL NOTES

EROSION CONTROL NOTES

TEMPORARY EROSION CONTROL NOTES

1. THE PLACEMENT OF EROSION/SEDIMENTATION CONTROLS SHALL BE IN ACCORDANCE WITH THE APPROVED EROSION AND SEDIMENTATION CONTROL PLAN.
2. ANY MAJOR VARIATION IN MATERIALS OR LOCATIONS OF CONTROLS OR FENCES FROM THOSE SHOWN ON THE APPROVED PLANS WILL REQUIRE A REVISION AND MUST BE APPROVED BY THE REVIEWING ENGINEER, ENVIRONMENTAL SPECIALIST, OR ARBORIST AS APPROPRIATE. MAJOR REVISIONS MUST BE APPROVED BY THE PLANNING AND DEVELOPMENT DEPARTMENT AND THE DRAINAGE UTILITY DEPARTMENT. MINOR CHANGES OR ADDITIONAL CONTROL MEASURES TO BE MADE AS FIELD REVISIONS TO THE EROSION AND SEDIMENTATION CONTROL PLAN MAY BE REQUIRED BY THE ENVIRONMENTAL INSPECTOR DURING THE COURSE OF CONSTRUCTION TO CORRECT CONTROL INADEQUACIES AT NO ADDITIONAL COST TO THE OWNER.
3. CONTRACTOR SHALL PLACE EROSION CONTROL BLANKET (NORTH AMERICAN GREEN S150 OR APPROVED EQUAL) ON ALL SITE AREAS WITH SLOPES GREATER THAN 4:1, AND IN THE BOTTOM AND SIDE SLOPES OF ALL SWALES.
4. PRIOR TO FINAL ACCEPTANCE, HAUL ROADS AND WATERWAY CROSSINGS CONSTRUCTED FOR TEMPORARY CONTRACTOR ACCESS MUST BE REMOVED, ACCUMULATED SEDIMENT REMOVED FROM THE WATERWAY AND THE AREA RESTORED TO THE ORIGINAL GRADE AND REVEGETATED. ALL LAND CLEARING SHALL BE DISPOSED OF IN APPROVED SPOIL DISPOSAL SITES.
5. PERMANENT, FINAL PLANT COVERING OR STRUCTURES SHALL BE INSTALLED PRIOR TO FINAL ACCEPTANCE.
6. ALL CONTROL DEVICES THAT FUNCTION SIMILARLY TO SILT FENCE OR FIBER ROLLS MUST BE REPAIRED, REPLACED OR SUPPLEMENTED WITH EFFECTIVE CONTROLS WHEN THEY BECOME NONFUNCTIONAL OR THE SEDIMENT REACHES ONE-THIRD THE HEIGHT OF THE DEVICE. THESE REPAIRS MUST BE MADE WITHIN 24 HOURS OF THE RAINFALL EVENT OR AS SOON AS FIELD CONDITIONS ALLOW ACCESS.
7. ALL SEDIMENT DELTAS AND DEPOSITS MUST BE REMOVED FROM SURFACE WATERS, DRAINAGE WAYS, CATCH BASINS AND OTHER DRAINAGE SYSTEMS. ALL AREAS WHERE SEDIMENT REMOVAL RESULTED IN EXPOSED SOIL MUST BE RESTABILIZED. THE REMOVAL AND STABILIZATION MUST TAKE PLACE IMMEDIATELY, BUT NO MORE THAN 7 DAYS AFTER THE RAINFALL EVENT UNLESS PRECLUDED BY LEGAL, REGULATORY OR PHYSICAL ACCESS CONSTRAINTS. ALL REASONABLE EFFORTS MUST BE USED TO OBTAIN ACCESS. ONCE ACCESS IS OBTAINED, REMOVAL AND STABILIZATION MUST TAKE PLACE IMMEDIATELY, BUT NO MORE THAN 7 DAYS LATER. CONTRACTOR IS RESPONSIBLE FOR CONTACTING ALL APPROPRIATE AUTHORITIES AND RECEIVING THE APPLICABLE PERMITS PRIOR TO CONDUCTING ANY WORK.
8. ACCUMULATIONS OF TRACKED AND DEPOSITED SEDIMENT MUST BE REMOVED FROM OFF-SITE PAVED SURFACES WITHIN 24 HOURS OR SOONER IF REQUIRED. SEDIMENT TRACKING MUST BE MINIMIZED BY THE APPROPRIATE MANAGEMENT PRACTICE, LIKE A DEDICATED SITE EXIT WITH AN AGGREGATE SURFACE OR DESIGNATED OFFSITE PARKING AREA. CONTRACTOR IS RESPONSIBLE FOR STREET SWEEPING AND/OR SCRAPING IF YOUR PRACTICES ARE NOT ADEQUATE TO PREVENT SEDIMENT FROM BEING TRACKED FROM THE SITE.
9. SURFACE WATERS, DRAINAGE DITCHES AND CONVEYANCE SYSTEMS MUST BE INSPECTED FOR SEDIMENT DEPOSITS.
10. PUMPING SEDIMENT LADEN WATER INTO ANY STORMWATER FACILITY THAT IS NOT DESIGNATED TO BE A SEDIMENT TRAP, DRAINAGEWAY, OR OFFSITE AREA EITHER DIRECTLY OR INDIRECTLY WITHOUT FILTRATION IS PROHIBITED.
11. SOIL STOCKPILES SHALL NOT BE LOCATED IN A DRAINAGEWAY, FLOOD PLAIN AREA OR A DESIGNATED BUFFER, UNLESS OTHERWISE APPROVED, UNDER SPECIFIC CONDITIONS TO BE ESTABLISHED BY THE DIRECTOR OR ADMINISTRATOR.
12. STOCKPILES TO REMAIN IN PLACE FOR MORE THAN THREE DAYS SHALL BE PROVIDED WITH SESC MEASURES. MATERIAL IS TO BE HAULED OFF IMMEDIATELY AND LEGALLY IF NO STOCKPILE IS TO REMAIN IN PLACE.
13. ALL TEMPORARY SESC MEASURES SHALL BE REMOVED WITHIN 30 DAYS AFTER FINAL STABILIZATION IS ACHIEVED.TRAPPED SEDIMENT AND OTHER DISTURBED SOILS RESULTING FROM TEMPORARY MEASURES SHALL BE PROPERLY DISPOSED OF PRIOR TO PERMANENT STABILIZATION.
14. WATER REMOVED FROM TRAPS, BASINS, AND OTHER WATER HOLDING DEPRESSIONS OR EXCAVATIONS MUST FIRST PASS THROUGH A SEDIMENT CONTROL AND/OR FILTRATION DEVICE, WHEN DEWATERING DEVICES ARE USED, DISCHARGE LOCATIONS SHALL BE PROTECTED FROM EROSION.

NOTE: THE SEQUENCE OF CONSTRUCTION SHOWN ABOVE IS A GENERAL OVERVIEW AND IS INTENDED TO CONVEY THE GENERAL CONCEPTS OF THE EROSION CONTROL DESIGN AND SHOULD NOT BE RELIED UPON FOR CONSTRUCTION PURPOSES. THE CONTRACTOR IS SOLELY RESPONSIBLE FOR DETAILED PHASING AND CONSTRUCTION SEQUENCING NECESSARY TO CONSTRUCT THE PROPOSED IMPROVEMENTS INCLUDED IN THESE PLANS. THE CONTRACTOR SHALL NOTIFY ENGINEER IN WRITING IMMEDIATELY, PRIOR TO AND/OR DURING CONSTRUCTION IF ANY ADDITIONAL INFORMATION ON THE CONSTRUCTION SEQUENCE IS NECESSARY. CONTRACTOR IS SOLELY RESPONSIBLE FOR COMPLYING WITH THE REQUIREMENTS OF THE AUTHORITY HAVING JURISDICTION AND ALL OTHER APPLICABLE LAWS.

GRADING NOTES

1. CONTRACTOR TO VERIFY ALL EXISTING TOPOGRAPHY AND STRUCTURES ON THE SITE AND IMMEDIATELY NOTIFY THE ENGINEER OF ANY DISCREPANCIES PRIOR TO STARTING WORK.
2. ALL PAVEMENT SPOT GRADE ELEVATIONS AND RIM ELEVATIONS WITHIN OR ALONG CURB AND GUTTER REFER TO EDGE OF PAVEMENT ELEVATIONS UNLESS OTHERWISE NOTED.
3. ALL ELEVATIONS SHOWN DEPICT FINISHED GRADE OR EDGE OF PAVEMENT UNLESS OTHERWISE NOTED. GENERAL CONTRACTOR TO COORDINATE WITH EXCAVATION, LANDSCAPE AND PAVING SUBCONTRACTORS REGARDING TOPSOIL THICKNESS FOR LANDSCAPE AREAS AND PAVEMENT SECTION THICKNESS FOR PAVED AREAS TO PROPERLY ENSURE ADEQUATE CUT TO ESTABLISH SUBGRADE ELEVATIONS.
4. NO EARTHEN SLOPE SHALL BE GREATER THAN 3:1, UNLESS OTHERWISE NOTED.
5. MAXIMUM SLOPE IN ACCESSIBLE PARKING SPACES AND LOADING ZONES SHALL NOT EXCEED 2.0% IN ALL DIRECTIONS.
6. MAXIMUM RUNNING SLOPE SHALL NOT EXCEED 5% AND CROSS SLOPE SHALL NOT EXCEED 2% ON ALL SIDEWALKS AND ACCESSIBLE ROUTES UNLESS OTHERWISE NOTED.
7. WHEN NATURAL FLOW OF DRAINAGE IS AWAY FROM CURB, CONTRACTOR TO INSTALL REVERSE GUTTER PITCH.
8. MATCH EXISTING ELEVATIONS AT THE PROPERTY LIMITS.
9. ALL STOOPS OR PEDESTRIAN EGRESS POINTS FROM THE BUILDING(S) SHALL BE NO GREATER THAN 2% FOR THE FIRST 5'.

UTILITY NOTES

GENERAL UTILITY NOTES

1. ALL WATER LINES SHALL BE PVC C900 DR-14 OR DUCTILE IRON CL 350.
2. ALL SANITARY SEWER LINES SHALL BE PVC MEETING, ASTM D-3034 SDR 26 EXCEPT FOR SANITARY SEWER THAT CROSSES ABOVE WATER MAIN, THIS PIPE SHALL BE AWWA C900 (UNLESS WATER MAIN CASING IS UTILIZED). PROVIDE 36" MINIMUM COVER (PER IDEM).
3. CONTRACTOR SHALL COORDINATE ANY DISRUPTIONS TO EXISTING UTILITY SERVICES WITH ADJACENT PROPERTY OWNERS.
4. ALL ELECTRIC AND TELEPHONE EXTENSIONS INCLUDING SERVICE LINES SHALL BE CONSTRUCTED TO THE APPROPRIATE UTILITY COMPANY SPECIFICATIONS. ALL UTILITY DISCONNECTIONS SHALL BE COORDINATED WITH THE DESIGNATED UTILITY COMPANIES.
5. CONSTRUCTION SHALL NOT START ON ANY PUBLIC UTILITY SYSTEM UNTIL WRITTEN APPROVAL HAS BEEN RECEIVED BY THE ENGINEER FROM THE APPROPRIATE GOVERNING AUTHORITY AND CONTRACTOR HAS BEEN NOTIFIED BY THE ENGINEER.
6. CONTRACTOR TO CALL INDIANA 811 (811 OR 800-382-5544) TO COORDINATE FIELD LOCATIONS OF EXISTING UNDERGROUND UTILITIES BEFORE ORDERING MATERIALS OR COMMENCING CONSTRUCTION. NOTIFY ENGINEER OF ANY DISCREPANCIES IMMEDIATELY.
7. PRIOR TO THE CONSTRUCTION OF OR CONNECTION TO ANY STORM DRAIN, SANITARY SEWER, WATER MAIN OR ANY OTHER UTILITIES, THE CONTRACTOR SHALL EXCAVATE, VERIFY AND CALCULATE ALL POINTS OF CONNECTION AND ALL UTILITY CROSSINGS AND INFORM THE ENGINEER AND THE OWNER / DEVELOPER OF ANY CONFLICT OR REQUIRED DEVIATIONS FROM THE PLAN. NOTIFICATION SHALL BE MADE A MINIMUM OF 72 HOURS PRIOR TO CONSTRUCTION. THE ENGINEER AND ITS CLIENTS SHALL BE HELD HARMLESS IN THE EVENT THAT THE CONTRACTOR FAILS TO MAKE SUCH NOTIFICATION. THE MUNICIPALITY SHALL BE NOTIFIED OF ANY AND ALL CHANGES TO THE DESIGN PLANS.
8. CONTRACTOR SHALL COMPLY COMPLETELY WITH THE LATEST STANDARDS OF OSHA DIRECTIVES OR ANY OTHER AGENCY HAVING JURISDICTION FOR EXCAVATION AND TRENCHING PROCEDURES. THE CONTRACTOR SHALL USE SUPPORT SYSTEMS, SLOPING, BENCHING AND OTHER MEANS OF PROTECTION. THIS IS TO INCLUDE, BUT NOT LIMITED FOR ACCESS AND EGRESS FROM ALL EXCAVATION AND TRENCHING. CONTRACTOR IS RESPONSIBLE FOR COMPLYING WITH PERFORMANCE CRITERIA AS REQUIRED BY OSHA.
9. CONTRACTOR TO AVOID DISRUPTION OF ANY ADJACENT TENANT'S TRAFFIC OPERATIONS DURING INSTALLATION OF UTILITIES.
10. ALL DIMENSIONS ARE TO CENTERLINE OF PIPE OR CENTER OF MANHOLE UNLESS NOTED OTHERWISE.
11. SEE ARCHITECTURAL AND MEP PLANS FOR EXACT UTILITY CONNECTION LOCATIONS AT BUILDING.
12. LIGHT POLES SHOWN FOR COORDINATION PURPOSES ONLY AND DO NOT REPRESENT ACTUAL SIZE. SEE SITE LIGHTING PLANS BY OTHERS FOR MORE INFORMATION.
13. SEE DETAILS FOR LOCATING STORM STRUCTURES WITHIN THE CURB LINE.
14. STORMWATER FACILITIES MUST BE FUNCTIONAL BEFORE BUILDING CONSTRUCTION BEGINS.

Indiana Utilities Protection Service
Call 811 before you dig

EXISTING LEGEND

BOLLARD	MISC L/O	YARD LIGHT
CONTROL BENCHMARK	MONITOR WELL	SANITARY CLEANOUT
ROW MONUMENT	GAS MARKER	SANITARY MANHOLE
FLAG POLE	GAS METER	VENT PIPE
MAIL BOX	GAS VALVE	STORM CURB INLET
UTILITY POLE	AC UNIT	STORM INLET
POST	AREA LIGHT	STORM ROOF DRAIN
SOIL BORING	ELECTRICAL BOX	STORM DRAIN MANHOLE
HANDICAP SYMBOL	ELECTRICAL HAND HOLE	STORM YARD DRAIN
SIGN	ELECTRICAL METER	FIRE DEPT CONNECTION
CABLE MANHOLE	ELECTRICAL MANHOLE	FIRE HYDRANT
CABLE PEDESTAL	ELECTRICAL MARKER	IRRIGATION VALVE
TELEPHONE PEDESTAL	ELECTRICAL TRANSFORMER	POST INDICATOR VALVE
TELEPHONE HAND HOLE	GUY POLE/WIRE	WELL
TELEPHONE MARKER	POWER POLE	WATER METER
TELEPHONE MANHOLE	TRAFFIC SIGNAL POLE	WATER VALVE
FIBER OPTIC MARKER	TRAFFIC MANHOLE	TREE / STUMP
SWALE	TS	TOE OF SLOPE
X FENCE LINE	TB	TOP OF BANK
SS SANITARY SEWER	FIB	UNDERGROUND FIBER OPTIC
SD STORM DRAIN	OHE	OVERHEAD ELECTRICAL
W WATER LINE	GAS	UNDERGROUND GAS
TREE LINE	TEL	UNDERGROUND TELEPHONE

BENCHMARKS

SITE BENCHMARKS:
(LOCATIONS SHOWN ON SURVEY)

BENCHMARK #1 MAG NAIL SET ALONG NORTH PROPERTY LINE
ELEVATION=935.71 (NAVD88)

BENCHMARK #2 MAG NAIL SET ALONG EAST PROPERTY LINE IN MARLEON ROW
ELEVATION=938.77 (NAVD88)

BENCHMARK #3 MAG NAIL SET ALONG IN BETHEL AVE ROW IN ASPHALT TRAIL
ELEVATION=940.41 (NAVD88)

No.	REVISIONS	DATE	BY

Kimley»Horn
© 2024 KIMLEY-HORN AND ASSOCIATES, INC.
11590 N. MERIDIAN ST. SUITE 300,
INDIANAPOLIS, IN 46240
PHONE: 317-218-9560
WWW.KIMLEY-HORN.COM

SCALE: AS NOTED
DESIGNED BY: CSM
DRAWN BY: GWE
CHECKED BY: CSM

CHAD STEVEN SHAYE REGISTERED PROFESSIONAL ENGINEER INDIANA NOT APPROVED FOR CONSTRUCTION

MIRA DEVELOPMENT

GENERAL NOTES

HOME2 SUITES
MUNCIE HOTEL
NWC BETHEL AVE & N MARLEON DR
MUNCIE, IN 47304

ORIGINAL ISSUE: 08/04/2023
KHA PROJECT NO. 170313001
SHEET NUMBER
C1.1

Drawing name: K:\IND_LDEV\170313001_Windevelopment_MuncieHotel_Muncie_IN\2 Design\CADD\PlanSheets\C1.1-GENERAL NOTES.dwg C1.1 Apr 01, 2024 7:05pm by: ChadSkyes
This document, together with the concepts and designs presented herein, as an instrument of service, is intended only for the specific purpose and client for which it was prepared. Reuse of and improper reliance on this document without written authorization and adaptation by Kimley-Horn and Associates, Inc. shall be without liability to Kimley-Horn and Associates, Inc.

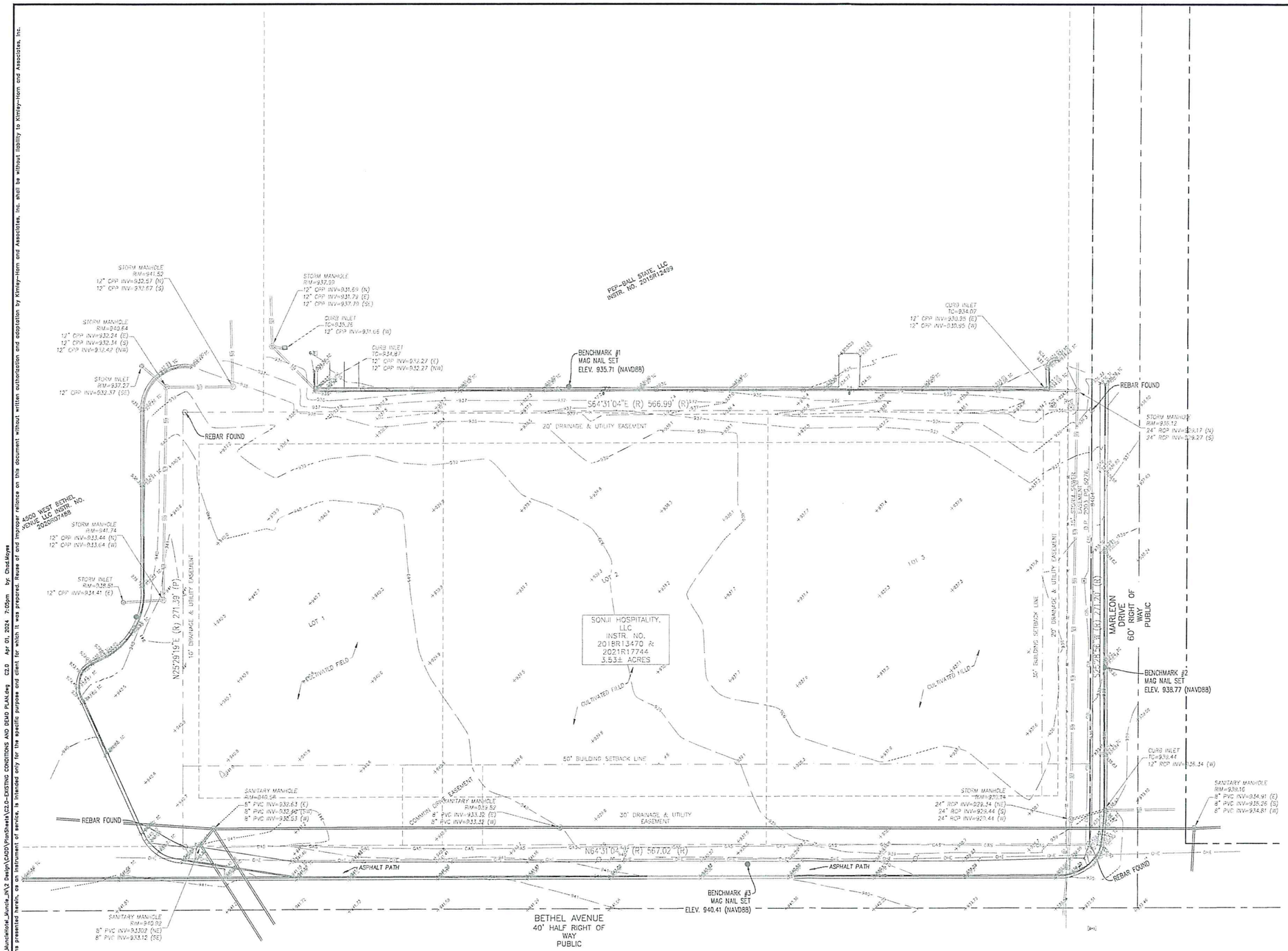

Indiana Utilities Protection Service

Call 811 before you dig

NORTH

GRAPHIC SCALE IN FEET
0 15' 30' 60'

DEMOLITION LEGEND

A.		SAWCUT LINE
B.		CURB REMOVAL
C.		UTILITY REMOVAL
D.		FULL-DEPTH ASPHALT PAVEMENT REMOVAL
E.		CONCRETE REMOVAL
F.		BUILDING REMOVAL
G.		ASPHALT 1.5" MILL
H.		FENCE REMOVAL
I.		ITEM TO BE RELOCATED
J.		ITEM TO BE REMOVED
K.		ITEM TO REMAIN, PROTECT THROUGHOUT DURATION OF CONSTRUCTION
L.		REMOVE & REPLACE CASTING WITH NEENAH R-3472
M.		ADJUST CASTING / STRUCTURE TO PROPOSED GRADE

EXISTING LEGEND

BOLLARD	MISC LID	YARD LIGHT
CONTROL BENCHMARK	MONITOR WELL	SANITARY CLEANOUT
ROW MONUMENT	GAS MARKER	SANITARY MANHOLE
FLAG POLE	GAS METER	VENT PIPE
MAIL BOX	GAS VALVE	STORM CURB INLET
UTILITY POLE	AC UNIT	STORM INLET
POST	AREA LIGHT	STORM ROOF DRAIN
SOIL BORING	ELECTRICAL BOX	STORM DRAIN MANHOLE
HANDICAP SYMBOL	ELECTRICAL HAND HOLE	STORM YARD DRAIN
SIGN	ELECTRICAL METER	FIRE DEPT CONNECTION
CABLE MANHOLE	ELECTRICAL MANHOLE	FIRE HYDRANT
CABLE PEDESTAL	ELECTRICAL MARKER	IRRIGATION VALVE
TELEPHONE PEDESTAL	ELECTRICAL TRANSFORMER	POST INDICATOR VALVE
TELEPHONE HAND HOLE	GUY POLE/WIRE	WELL
TELEPHONE MARKER	POWER POLE	WATER METER
TELEPHONE MANHOLE	TRAFFIC SIGNAL POLE	WATER VALVE
FIBER OPTIC MAKER	TRAFFIC MANHOLE	TREE / STUMP
SWALE		TOE OF SLOPE
FENCE LINE		TOP OF BANK
SANITARY SEWER		UNDERGROUND FIBER OPTIC
STORM DRAIN		OVERHEAD ELECTRICAL
WATER LINE		UNDERGROUND GAS
TREE LINE		UNDERGROUND TELEPHONE

GENERAL PLAN NOTES

REFER TO GENERAL NOTES SHEET FOR MORE INFORMATION INCLUDING THE FOLLOWING: (EXISTING LEGEND, BENCHMARK INFORMATION, AND SPECIFIC GENERAL PLAN NOTES.)

No.	REVISIONS	DATE	BY

Kimley»Horn
©2024 KIMLEY-HORN AND ASSOCIATES, INC.
9465 KEYSTONE CROSSING, SUITE 300,
INDIANAPOLIS, IN 46240
PHONE: 317-218-9560
WWW.KIMLEY-HORN.COM

SCALE: AS NOTED
DESIGNED BY: CSM
DRAWN BY: GWE
CHECKED BY: CSM

CHAD STEVENS, REGISTERED, INDIANA, PROFESSIONAL ENGINEER
NOT APPROVED FOR CONSTRUCTION

MIRA DEVELOPMENT

EXISTING CONDITIONS AND DEMO PLAN

HOME2 SUITES
MUNCIE HOTEL
NWC BETHEL AVE & N MARLEON DR
MUNCIE, IN 47304

ORIGINAL ISSUE: 08/04/2023
KHA PROJECT NO. 170313001
SHEET NUMBER
C2.0

Drawing name: K:\IND_LDEV\170313001_MindDevelopment_MuncieHotel_Muncie_IN\2 Design\CADD\PlanSheets\C2.0-EXISTING CONDITIONS AND DEMO PLAN.dwg C2.0 Apr 01, 2024 7:05pm by: Chad.Moyes
This document, together with the concepts and designs presented herein, as an instrument of service, is intended only for the specific purpose and client for which it was prepared. Reuse of and improper reliance on this document without written authorization and adaptation by Kimley-Horn and Associates, Inc. shall be without liability to Kimley-Horn and Associates, Inc.

Drawing name: K:\IND_LDEV\170313001_MiraDevelopment_LauncheHotel_Muncie_IN\2 Design\CADD\PlanSheets\C3.0-SITE PLAN.dwg C3.0 Apr 01, 2024 7:05pm by: ChadHayes
This document, together with the concepts and designs presented herein, as an instrument of service, is intended only for the specific purpose and client for which it was prepared. Reuse of and improper reliance on this document without written authorization and adaptation by Kimley-Horn and Associates, Inc. shall be without liability to Kimley-Horn and Associates, Inc.

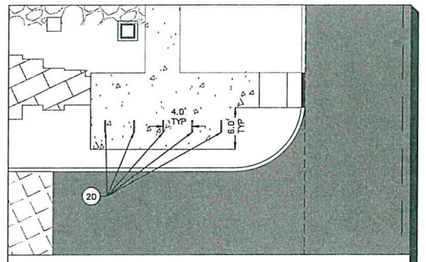

ENLARGED DETAIL 01

SCALE: 1"=10'

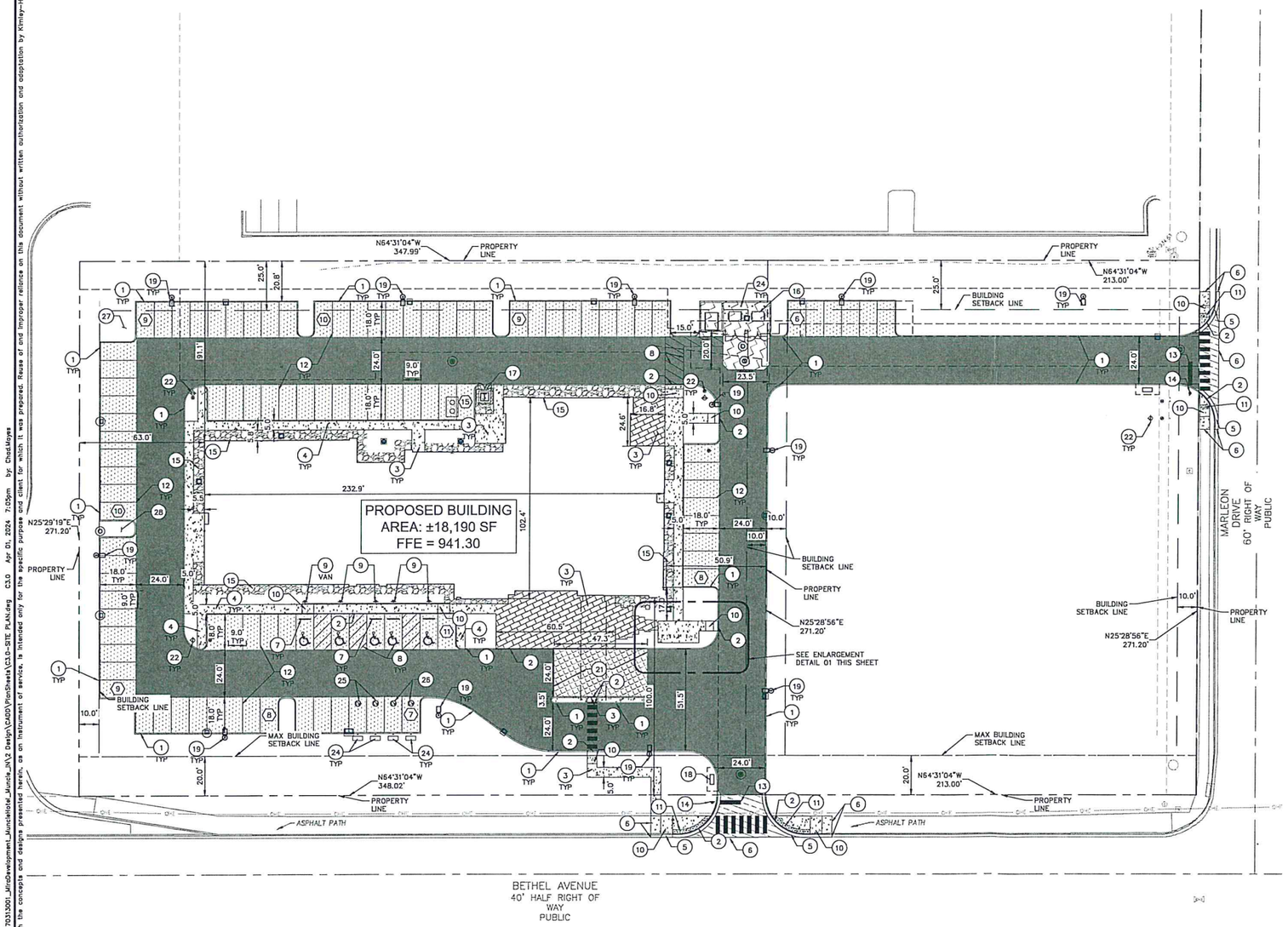

Indiana Utilities Protection Service
Call 811 before you dig

NORTH

GRAPHIC SCALE IN FEET
0 15' 30' 60'

EXISTING LEGEND

BOLLARD	MISC LID	YARD LIGHT
CONTROL BENCHMARK	MONITOR WELL	SANITARY CLEANOUT
ROW MONUMENT	GAS MARKER	SANITARY MANHOLE
FLAG POLE	GAS METER	VENT PIPE
MAIL BOX	GAS VALVE	STORM CURB INLET
UTILITY POLE	AC UNIT	STORM INLET
POST	AREA LIGHT	STORM ROOF DRAIN
SOIL BORING	ELECTRICAL BOX	STORM DRAIN MANHOLE
HANDICAP SYMBOL	ELECTRICAL HAND HOLE	STORM YARD DRAIN
SIGN	ELECTRICAL METER	FIRE DEPT CONNECTION
CABLE MANHOLE	ELECTRICAL MANHOLE	FIRE HYDRANT
CABLE PEDESTAL	ELECTRICAL MARKER	IRRIGATION VALVE
TELEPHONE PEDESTAL	ELECTRICAL TRANSFORMER	POST INDICATOR VALVE
TELEPHONE HAND HOLE	GUY POLE/WIRE	WELL
TELEPHONE MARKER	POWER POLE	WATER METER
TELEPHONE MANHOLE	TRAFFIC SIGNAL POLE	WATER VALVE
FIBER OPTIC MAKER	TRAFFIC MANHOLE	TREE / STUMP
SWALE	TS	TOE OF SLOPE
FENCE LINE	TB	TOP OF BANK
SANITARY SEWER	FIB	UNDERGROUND FIBER OPTIC
STORM DRAIN	OHE	OVERHEAD ELECTRICAL
WATER LINE	GAS	UNDERGROUND GAS
TREE LINE	TEL	UNDERGROUND TELEPHONE

BENCHMARKS

SITE BENCHMARKS:
(LOCATIONS SHOWN ON SURVEY)

BENCHMARK #1 MAG NAIL SET ALONG NORTH PROPERTY LINE
ELEVATION=935.71 (NAVD88)

BENCHMARK #2 MAG NAIL SET ALONG EAST PROPERTY LINE IN MARLEON ROW
ELEVATION=938.77 (NAVD88)

BENCHMARK #3 MAG NAIL SET ALONG IN BETHEL AVE ROW IN ASPHALT TRAIL
ELEVATION=940.41 (NAVD88)

PAVING LEGEND

- STANDARD DUTY ASPHALT PAVEMENT — SEE CONSTRUCTION DETAILS FOR PAVEMENT SECTION
- HEAVY DUTY ASPHALT PAVEMENT — SEE CONSTRUCTION DETAILS FOR PAVEMENT SECTION
- RIGHT OF WAY PAVEMENT — SEE CONSTRUCTION DETAILS FOR PAVEMENT SECTION
- CONCRETE SIDEWALK — SEE CONSTRUCTION DETAILS FOR PAVEMENT SECTION
- HEAVY DUTY CONCRETE PAVEMENT — SEE CONSTRUCTION DETAILS FOR PAVEMENT SECTION
- ASPHALT TRAIL — SEE CONSTRUCTION DETAILS FOR PAVEMENT SECTION
- LANDSCAPE GRAVEL — SEE LANDSCAPE DETAILS FOR GRAVEL SECTION
- STAMPED CONCRETE — SEE ARCHITECTURAL DETAILS FOR CONCRETE SECTION
- FROST FREE SLAB — SEE CONSTRUCTION DETAILS FOR SLAB SECTION

SITE SUMMARY

SITE ZONING	=	VARIETY BUSINESS (VB)
SITE ACREAGE	=	2.20 AC.±
BUILDING AREA	=	±18,190 SF
BUILDING HEIGHT	=	65' FT
PARKING SPACES (STANDARD) REQUIRED	=	113 SPACES
109 HOTEL ROOMS & 12 EMPLOYEES		
*10% REDUCTION: 2 SUSTAINABLE FEATURES	=	11 SPACES
PARKING SPACES (STANDARD) REQUIRED (ADJ)	=	102
PARKING SPACES (ACCESSIBLE) REQUIRED	=	4 SPACES
1 ADA VAN SPOT REQUIRED		
PARKING SPACES (STANDARD) PROVIDED	=	98 SPACES
PARKING SPACES (ACCESSIBLE) PROVIDED	=	5 SPACES
TOTAL PARKING SPACES PROVIDED	=	103 SPACES

KEY NOTES

1. CONCRETE CURB, TYP. (SEE DETAILS)
2. DEPRESSED CONCRETE CURB AND GUTTER (SEE DETAILS)
3. CONCRETE SIDEWALK, TYP. (SEE DETAILS)
4. COMBINED CURB AND WALK (SEE DETAIL) (5' FROM FACE OF CURB)
5. CONCRETE CURB AND GUTTER (SEE DETAILS)
6. CONNECT TO EXISTING PAVEMENT, SIDEWALK, CURB, TYP.
7. CONCRETE PARKING BUMPER TYP. (SEE DETAILS)
8. ACCESSIBLE PAVEMENT MARKINGS, TYP. (SEE DETAILS)
9. ACCESSIBLE PARKING SIGN, TYP. (SEE PLAN FOR VAN LOCATION) (MUTCD R7-8, SEE DETAILS)
10. ACCESSIBLE RAMP (SEE DETAILS)
11. 2' WIDE TACTILE WARNING STRIP
12. 4" WIDE PAVEMENT MARKING, WHITE SOLID LINE, TYP.
13. 24" WIDE STOP BAR, TYP. (SEE DETAILS)
14. STOP SIGN, TYP. (MUTCD R1-1, SEE DETAILS)
15. BUILDING FOUNDATION LANDSCAPE GRAVEL STRIP (REFER TO LANDSCAPE PLAN)
16. TRASH COMPACTOR AND ENCLOSURE (SEE ARCHITECTURAL PLANS FOR DETAILS)
17. TRANSFORMER PAD WITH SCREEN ENCLOSURE (REFER TO UTILITY PROVIDER)
18. MONUMENT SIGN (SEE ARCHITECTURAL PLANS FOR DETAILS)
19. LIGHT POLES SHOWN FOR COORDINATION ONLY (SEE SITE LIGHTING PLAN)
20. BIKE RACK (SEE CONSTRUCTION DETAILS)
21. PORTE-COCHERE AREA (SEE ARCHITECTURAL PLANS FOR DETAILS)
22. PROPOSED FIRE HYDRANT (SEE UTILITY PLAN)
23. 3-FT TRANSITION CURB (SEE DETAILS)
24. CONCRETE BOLLARD, TYP. (SEE DETAILS)
25. TESLA EV SPACE
26. UNIVERSAL EV SPACE
27. RAIN GARDEN (SEE LANDSCAPE PLAN FOR DETAILS)
28. STORM WATER PLANTERS (SEE LANDSCAPE PLAN FOR DETAILS)

GENERAL PLAN NOTES

REFER TO GENERAL NOTES SHEET FOR MORE INFORMATION INCLUDING THE FOLLOWING: (EXISTING LEGEND, BENCHMARK INFORMATION, AND SPECIFIC GENERAL PLAN NOTES.)

STRIPING & RAMP NOTES

1. ON-SITE STRIPING SHALL NOT BE YELLOW PAINT
2. ALL STRIPING IN ROW SHALL BE THERMOPLASTIC

No.	REVISIONS	DATE	BY

Kimley»Horn
©2024 KIMLEY-HORN AND ASSOCIATES, INC.
9201 WEST BROAD STREET, SUITE 300,
INDIANAPOLIS, IN 46240
PHONE: 317-218-9560
WWW.KIMLEY-HORN.COM

SCALE: AS NOTED
DESIGNED BY: CSM
DRAWN BY: GWE
CHECKED BY: CSM

CHAD STEVENS HAYES — STATE OF INDIANA — REGISTERED PROFESSIONAL ENGINEER — NOT APPROVED FOR CONSTRUCTION

MIRA DEVELOPMENT

SITE PLAN

HOME2 SUITES MUNCIE HOTEL
NWC BETHEL AVE & N MARLEON DR
MUNCIE, IN 47304

ORIGINAL ISSUE: 08/04/2023
KHA PROJECT NO. 170313001
SHEET NUMBER
C3.0

Drawing name: K:\IND_LDEV\170313001_MiraDevelopment_Muncie\Hotel_MV3 Design\C400\PlanSheet\C4.0-EROSION CONTROL PLAN.dwg C4.0 Apr 01, 2024 7:05pm by: ChadMeyer
This document, together with the concepts and designs presented herein, as an instrument of service, is intended only for the specific purpose and client for which it was prepared. Reuse of and improper reliance on this document without written authorization and adaptation by Kimley-Horn and Associates, Inc. shall be without liability to Kimley-Horn and Associates, Inc.

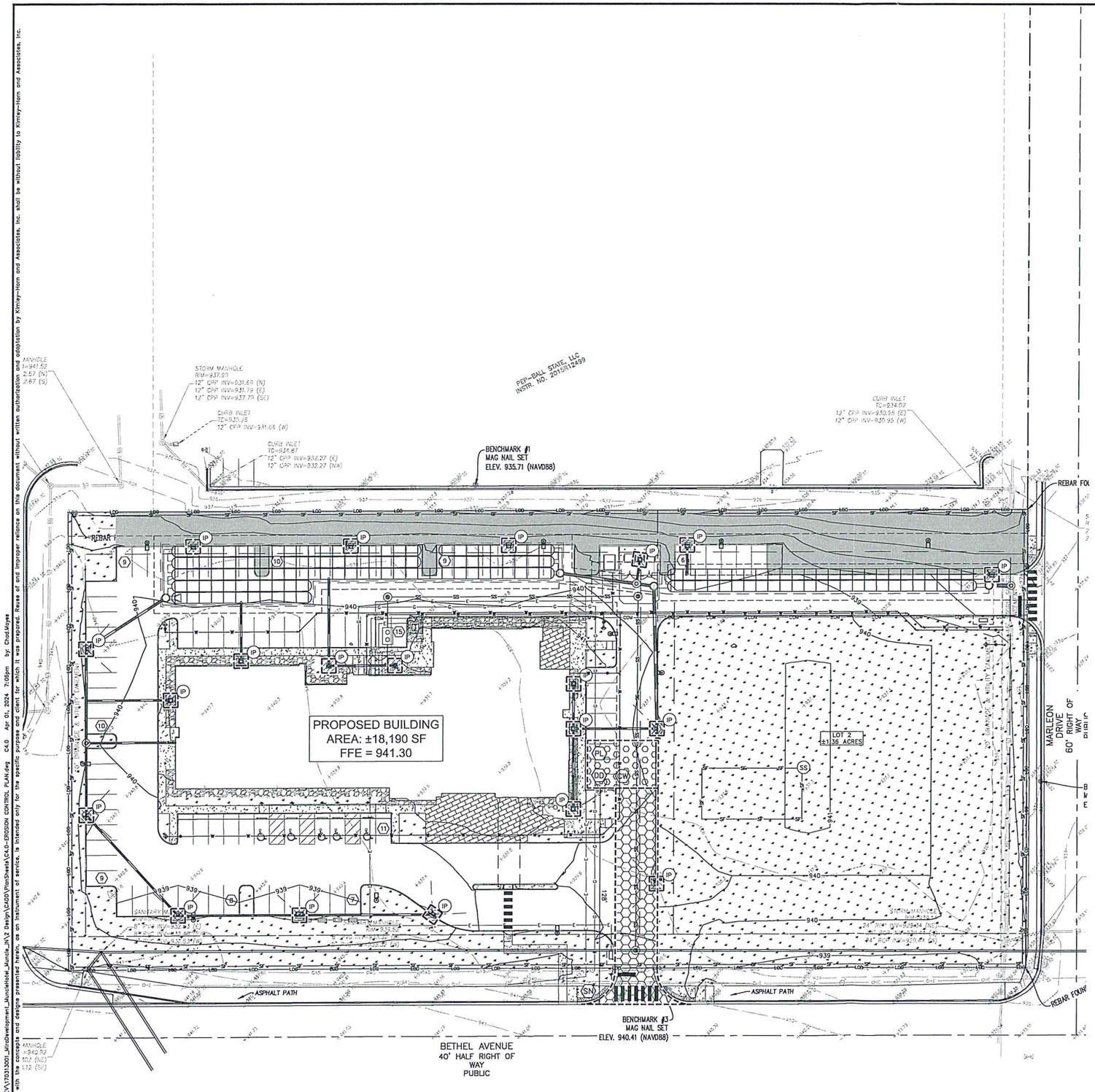

Indiana Utilities Protection Service
Call 811 before you dig

NORTH

GRAPHIC SCALE IN FEET
0 15' 30' 60'

EROSION CONTROL LEGEND

TS	TEMPORARY SEEDING (SEE EROSION CONTROL DETAILS)
EB	TEMPORARY EROSION CONTROL BLANKET (SEE TEMPORARY EROSION CONTROL NOTE #3)
CE	CONSTRUCTION ENTRANCE (SEE EROSION CONTROL DETAILS)
SF	SILT FENCE (SEE EROSION CONTROL DETAILS)
IP	AREA INLET PROTECTION (SEE EROSION CONTROL DETAILS)
CW	CONCRETE WASHOUT (SEE EROSION CONTROL DETAILS) (TO BE DETERMINED BY CONTRACTOR)
SS	TEMPORARY SOIL STOCKPILE
LD	LIMITS OF DISTURBANCE
620	EXISTING CONTOURS
620	PROPOSED CONTOURS
NS	N.O.I. SIGN
	STAGING AREA
DD	DEBRIS DUMPSTER
PL	PORT-O-LET

EXISTING LEGEND

BOLLARD	MISC LID	YARD LIGHT
CONTROL BENCHMARK	MONITOR WELL	SANITARY CLEANOUT
ROW MONUMENT	GAS MARKER	SANITARY MANHOLE
FLAG POLE	GAS METER	VENT PIPE
MAIL BOX	GAS VALVE	STORM CURB INLET
UTILITY POLE	AC UNIT	STORM INLET
POST	AREA LIGHT	STORM ROOF DRAIN
SOIL BORING	ELECTRICAL BOX	STORM DRAIN MANHOLE
HANDICAP SYMBOL	ELECTRICAL HAND HOLE	STORM YARD DRAIN
SIGN	ELECTRICAL METER	FIRE DEPT CONNECTION
CABLE MANHOLE	ELECTRICAL MANHOLE	FIRE HYDRANT
CABLE PEDESTAL	ELECTRICAL MARKER	IRRIGATION VALVE
TELEPHONE PEDESTAL	ELECTRICAL TRANSFORMER	POST INDICATOR VALVE
TELEPHONE HAND HOLE	GUY POLE/WIRE	WELL
TELEPHONE MARKER	POWER POLE	WATER METER
TELEPHONE MANHOLE	TRAFFIC SIGNAL POLE	WATER VALVE
FIBER OPTIC MAKER	TRAFFIC MANHOLE	TREE / STUMP
SWALE	TS — TOE OF SLOPE	
FENCE LINE	TB — TOP OF BANK	
SS — SANITARY SEWER	FIB — UNDERGROUND FIBER OPTIC	
SD — STORM DRAIN	OHE — OVERHEAD ELECTRICAL	
W — WATER LINE	GAS — UNDERGROUND GAS	
TREE LINE	TEL — UNDERGROUND TELEPHONE	

GENERAL PLAN NOTES

REFER TO GENERAL NOTES SHEET FOR MORE INFORMATION INCLUDING THE FOLLOWING: (EXISTING LEGEND, BENCHMARK INFORMATION, AND SPECIFIC GENERAL PLAN NOTES.)

No.	REVISIONS	DATE	BY

Kimley»Horn
©2024 KIMLEY-HORN AND ASSOCIATES, INC.
500 EAST 96TH STREET, SUITE 350,
INDIANAPOLIS, IN 46240
PHONE: 317-218-9560
WWW.KIMLEY-HORN.COM

SCALE: AS NOTED
DESIGNED BY: CSM
DRAWN BY: GWE
CHECKED BY: CSM

CHAD STEVEN MEYER, P.E. 21900042, STATE OF INDIANA, PROFESSIONAL ENGINEER
NOT APPROVED FOR CONSTRUCTION

MIRA DEVELOPMENT

EROSION CONTROL PLAN

HOME2 SUITES
MUNCIE HOTEL
NWC BETHEL AVE & N MARLEON DR
MUNCIE, IN 47304

ORIGINAL ISSUE: 08/04/2023
KHA PROJECT NO. 170313001
SHEET NUMBER
C4.0

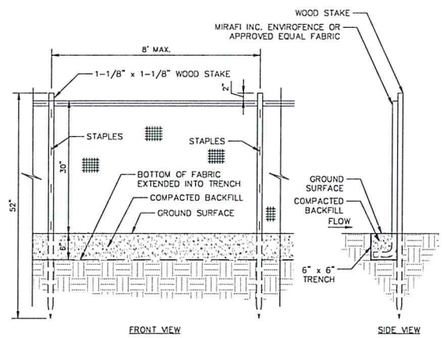

SEDIMENTATION/SILT FENCE

N.T.S.

STABILIZATION TYPE	JAN.	FEB.	MAR.	APR.	MAY	JUNE	JULY	AUG.	SEPT.	OCT.	NOV.	DEC.
PERMANENT SEEDING			A			*		A **				
DORMANT SEEDING	B										B	
TEMPORARY SEEDING			C					D				
SODDING				E **								
MULCHING	F											

A KENTUCKY BLUEGRASS 90 LBS/ACRE MIXED WITH PERENNIAL RYEGRASS 30 LBS/ACRE

B KENTUCKY BLUEGRASS 135 LBS/ACRE MIXED WITH PERENNIAL RYEGRASS 45 LBS/ACRE + 2 TONS STRAW MULCH/ACRE

C SPRING OATS 100 LBS/ACRE

D WHEAT OR CEREAL RYE 150 LBS/ACRE

E SOD

F STRAW MULCH 2 TONS/ACRE

* IRRIGATION NEEDED DURING JUNE AND AUGUST

** IRRIGATION NEEDED FOR 2 TO 3 WEEKS AFTER APPLYING SOD DURING ANY PART OF THE YEAR

SEEDING CHART

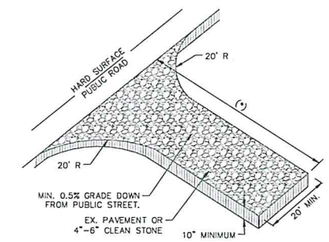

NOTE: (*)
50' FOR LAND DISTURBANCE SMALLER THAN 2.0 AC.
150' FOR LAND DISTURBANCE LARGER THAN 2.0 AC.

CONSTRUCTION ENTRANCE

N.T.S.

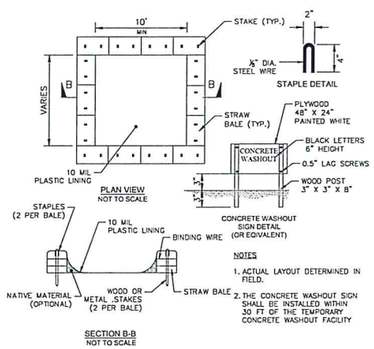

NOTES

1. ACTUAL LAYOUT DETERMINED IN FIELD.
2. THE CONCRETE WASHOUT SIGN SHALL BE INSTALLED WITHIN 30 FT OF THE TEMPORARY CONCRETE WASHOUT FACILITY

CONCRETE WASHOUT

N.T.S.

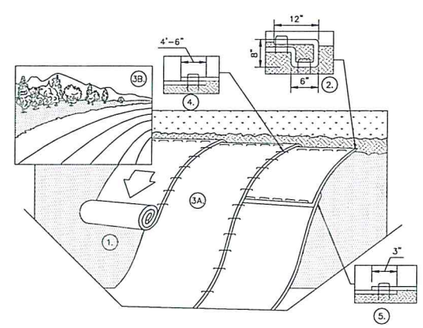

1. PREPARE SOIL BEFORE INSTALLING BLANKETS, INCLUDING ANY NECESSARY APPLICATION OF LIME, FERTILIZER, AND SEED.

2. BEGIN AT THE TOP OF THE SLOPE BY ANCHORING THE BLANKET IN A 6" DEEP X 6" WIDE TRENCH WITH APPROXIMATELY 12" OF BLANKET EXTENDED BEYOND THE UP-SLOPE PORTION OF THE TRENCH AS SHOWN IN DETAIL. ANCHOR THE BLANKET WITH A ROW OF STAPLES/STAKES APPROXIMATELY 12" APART IN THE BOTTOM OF THE TRENCH. BACKFILL AND COMPACT THE TRENCH AFTER STAPLING. APPLY SEED TO COMPACTED SOIL AND FOLD REMAINING 12" PORTION OF BLANKET BACK OVER SEED AND COMPACTED SOIL. SECURE BLANKET OVER COMPACTED SOIL WITH A ROW OF STAPLES/STAKES SPACED APPROXIMATELY 12" APART ACROSS THE WIDTH OF THE BLANKET.

3. ROLL THE BLANKETS (3A.) DOWN OR (3B.) HORIZONTALLY ACROSS THE SLOPE. BLANKETS WILL UNROLL WITH APPROPRIATE SIDE AGAINST THE SOIL SURFACE. ALL BLANKETS MUST BE SECURELY FASTENED TO SOIL SURFACE BY PLACING STAPLES/STAKES IN APPROPRIATE LOCATIONS AS PER MANUFACTURES RECOMMENDATION.

4. THE EDGES OF PARALLEL BLANKETS MUST BE STAPLED WITH MINIMUM 6" OVERLAP. TO ENSURE PROPER SEAM ALIGNMENT, PLACE THE EDGE OF THE OVERLAPPING BLANKET (BLANKET BEING INSTALLED ON TOP) EVEN WITH THE SEAM STITCH ON THE PREVIOUSLY INSTALLED BLANKET.

5. CONSECUTIVE BLANKETS SPLICED DOWN THE SLOPE MUST BE PLACED END OVER END (SHINGLE STYLE) WITH AN APPROXIMATE 3" OVERLAP. STAPLE THROUGH OVERLAPPED AREA, APPROXIMATELY 12" APART ACROSS ENTIRE BLANKET WIDTH.

7. PLACE STAPLES/STAKES PER MANUFACTURER'S RECOMMENDATION FOR THE APPROPRIATE SLOPE BEING APPLIED.

NOTES:
1. IN LOOSE SOIL CONDITIONS, THE USE OF STAPLE OR STAKE LENGTHS GREATER THAN 6" MAY BE NECESSARY TO PROPERLY SECURE THE BLANKETS.

2. FOLLOW EROSION CONTROL TECHNOLOGY COUNCIL SPECIFICATION FOR PRODUCT SELECTION.

EROSION CONTROL BLANKET (SLOPE INSTALLATION)

N.T.S.

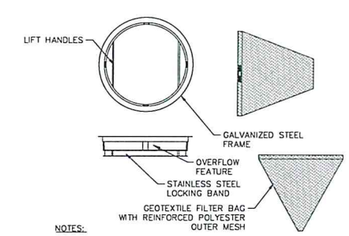

NOTES:

ALL PRODUCTS MANUFACTURED BY INLET AND PIPE PROTECTION, INC OR APPROVED EQUAL.

NOTE: INLET FILTERS ARE SLIGHTLY SMALLER THAN THE INLET GRATE SIZES. WHEN IDENTIFYING OR SPECIFYING FILTERS/CASTINGS PLEASE REFER TO THE DIAMETER "D" OR WIDTH "W" AND HEIGHT "H" OF FILTER FRAMES OR CASTING GRATES. YOU MAY ALSO REFER TO OUR CASTING CROSS REFERENCE GUIDE FOR INDOT STANDARDS

NOTE: ROUND AND SQUARE INLET FILTERS AVAILABLE FOR MOST NEENAH AND EAST JORDAN BEEHIVE, ROLL CURB AND CURB BOX FRAME TYPES

ALL IPP INLET FILTERS TO CONFORM TO INDOT SPECIFICATIONS.

INLET PROTECTION

N.T.S.

No.	REVISIONS	DATE	BY

Kimley»Horn
©2024 KIMLEY-HORN AND ASSOCIATES, INC.
9245 KEYSTONE CROSSING, SUITE 300,
INDIANAPOLIS, IN 46240
PHONE: 317-218-9560
WWW.KIMLEY-HORN.COM

SCALE: AS NOTED
DESIGNED BY: CSM
DRAWN BY: CWE
CHECKED BY: CSM

CHAD STEVEN MOYE, STATE OF INDIANA, REGISTERED PROFESSIONAL ENGINEER, NOT APPROVED FOR CONSTRUCTION

MIRA DEVELOPMENT

EROSION CONTROL DETAILS

HOME2 SUITES MUNCIE HOTEL
NWC BETHEL AVE & N MARLEON DR
MUNCIE, IN 47304

ORIGINAL ISSUE: 08/04/2023
KHA PROJECT NO. 170313001
SHEET NUMBER
C4.1

Drawing name: K:\IND_LDEV\170313001_MiraDevelopment_LaunchHotel_Muncie_IN\2 Design\CADD\PlanSheets\C4-1-EROSION CONTROL DETAILS.dwg C4.1 Apr 01, 2024 7:09pm by: ChadMoye
This document, together with the concepts and designs presented herein, as an instrument of service, is intended only for the specific purpose and client for which it was prepared. Reuse of and improper reliance on this document without written authorization and adaptation by Kimley-Horn and Associates, Inc. shall be without liability to Kimley-Horn and Associates, Inc.